DOCK RDK SCHEMATICS REV02

PAGE NO	PAGE TITLE
01	TITLE PAGE
02	BLOCK DIAGRAM
03	POWER FLOW DIAGRAM
04	INPUT POWER & CURRENT SENSE
05	SYSTEM REGULATOR - 5V, 3.3V, 1.2V
06	REGULATOR - 5V, 1V & DS1 PROVIDER PATH
07	HX3 - POWER & GPIO
08	HX3 - CLK & USB SS
09	VMM5320 HUB - POWER
10	VMM5320 HUB - SIGNALS
11	DP & HDMI CONNECTOR
12	USB MUX - US & DS1
13	USB CONNECTOR - US & DS1
14	CC & SBU PROTECTION
15	DS2 CONNECTOR & POWER SWITCH
16	CCG7SC - POWER SECTION
17	DS3 CONNECTOR & USB SWITCH
18	PMG1S3 - PORT0 & PORT1
19	PMG1S3 - PWR & GPIO
20	DEBUG HEADER & MISC
21	I2C TABLE & JUMPER
22	REVISION HISTORY

Legal Disclaimer :
The information given in this document shall in no event be regarded as a guarantee of conditions or characteristics. With respect to any examples or hints given herein, any typical values stated herein and/or any information regarding the application of the device, Infineon Technologies hereby disclaims any and all warranties and liabilities of any kind, including without limitation, warranties of non-infringement of intellectual property rights of any third party.

SCH Title : *EZ-PD PMG1-S3 USB-C Dock*				
Page Title: *TITLE PAGE*				
Size *A3*	Document Number *<Doc>*	Drawn By *ROHITH YADAV*	Approved By *GUBILI*	Rev *03*
Date: *Wednesday, September 27, 2023*		Sheet *1* of *22*		

DOCK RDK - BLOCK DIAGRAM

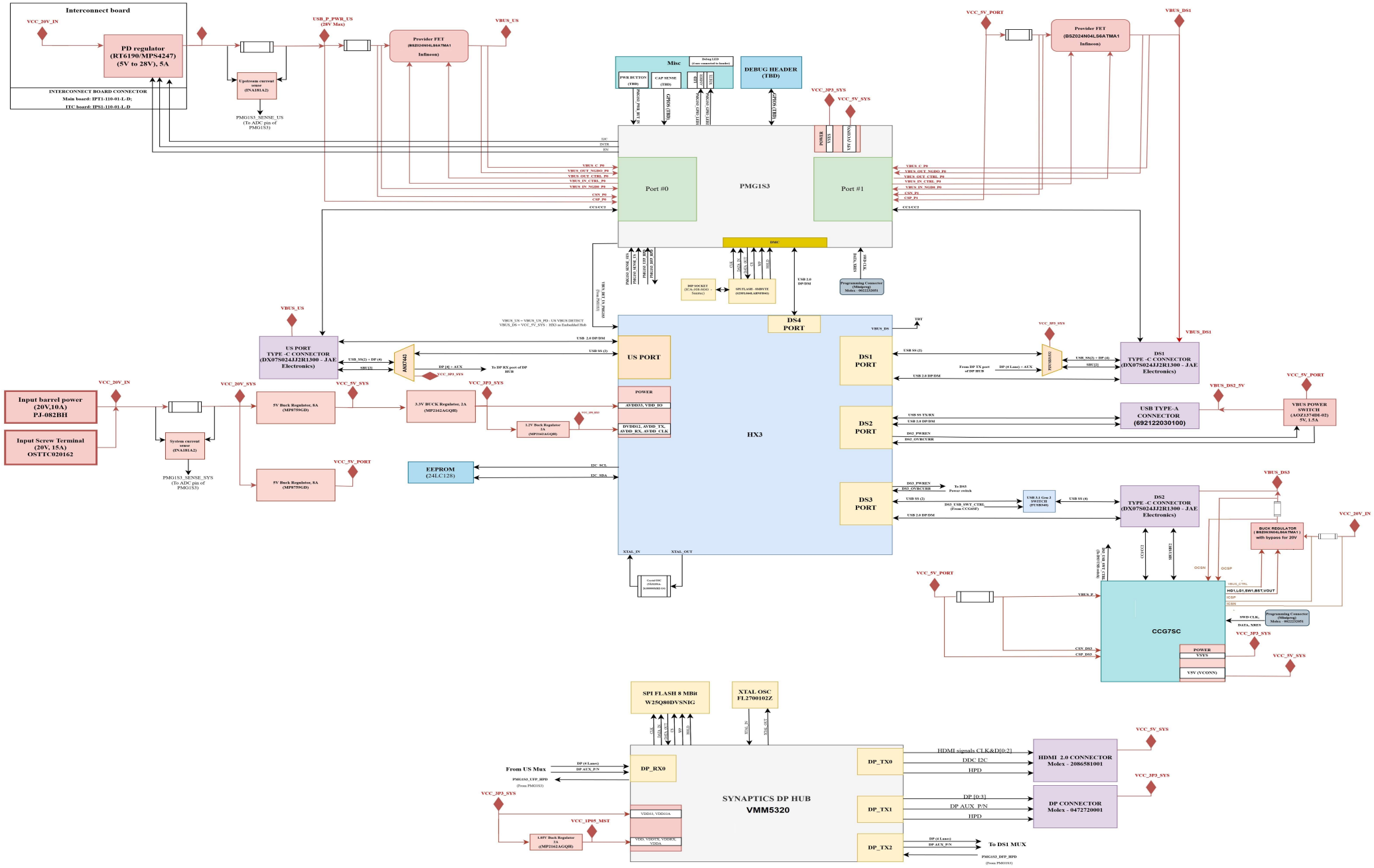

Legal Disclaimer :

The information given in this document shall in no event be regarded as a guarantee of conditions or characteristics. With respect to any examples or hints given herein, any typical values stated herein and/or any information regarding the application of the device, Infineon Technologies hereby disclaims any and all warranties and liabilities of any kind, including without limitation, warranties of non-infringement of intellectual property rights of any third party.

SCH Title : *EZ-PD PMG1-S3 USB-C Dock*				
Page Title: *BLOCK DIAGRAM*				
Size	Document Number	Drawn By	Approved By	Rev
A3	*<Doc>*	*ROHITH YADAV*	*GURLI*	*03*
Date: *Wednesday, September 27, 2023*		Sheet *2* of *22*		

POWER FLOW DIAGRAM - DOCK RDK

USB PORTS	PD CONT	POWER PROFILES (MAX)
US (TYPE-C)	PMG1-S3	140W EPR (28V, 5A)
DS1 (TYPE-C)	PMG1-S3	15W SPR (5V, 3A)
DS2 (TYPE-A)	-	7.5W (5V, 1.5A)
DS3 (TYPE-C)	CCG7SC	27W SPR (9V, 3A)

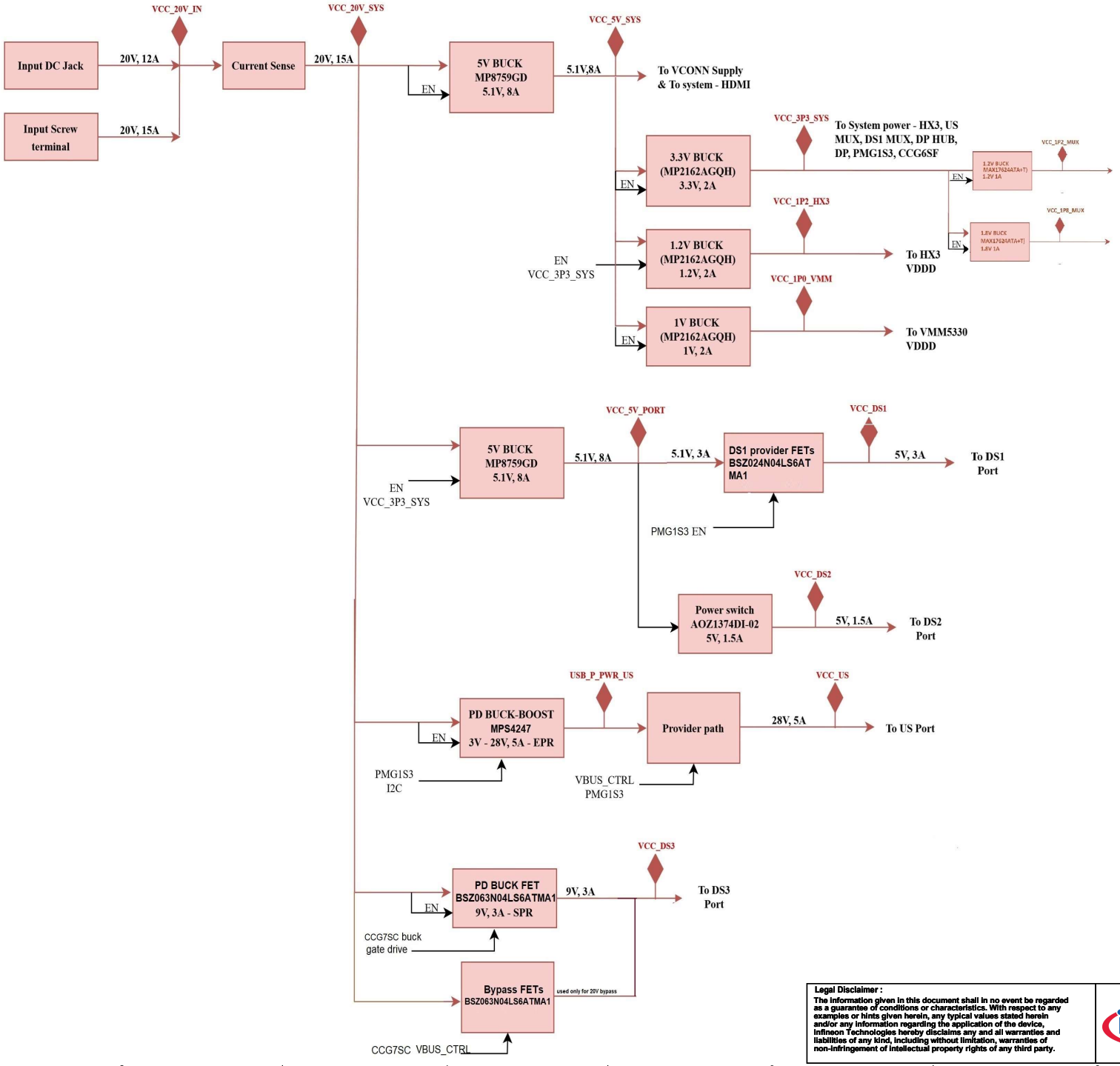

Legal Disclaimer :
The information given in this document shall in no event be regarded as a guarantee of conditions or characteristics. With respect to any examples or hints given herein, any typical values stated herein and/or any information regarding the application of the device, Infineon Technologies hereby disclaims any and all warranties and liabilities of any kind, including without limitation, warranties of non-infringement of intellectual property rights of any third party.

SCH Title : *EZ-PD PMG1-S3 USB-C Dock*				
Page Title: *POWER FLOW DIAGRAM*				
Size: *A3*	Document Number: *<Doc>*	Drawn By: *ROHITH YADAV*	Approved By: *GURILI*	Rev: *03*
Date: *Wednesday, September 27, 2023*		Sheet *3* of *22*		

INPUT POWER

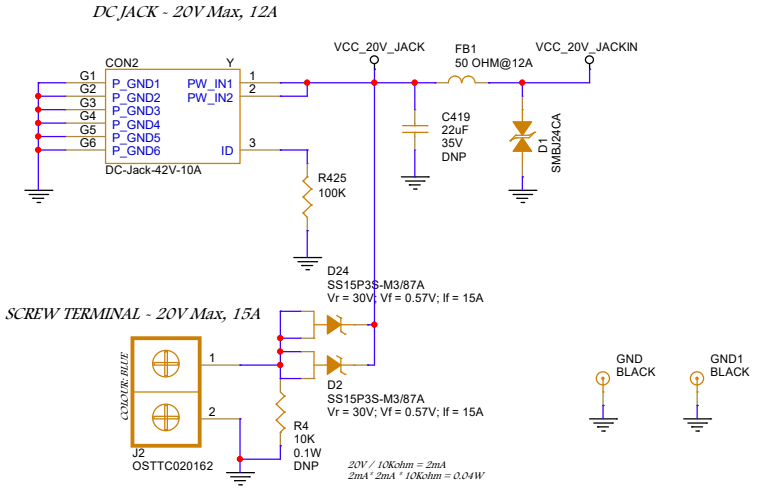

INPUT POWER CAPACITORS

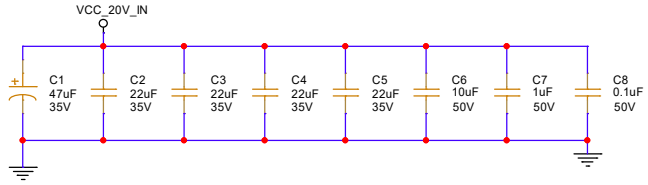

GLOBAL RESET

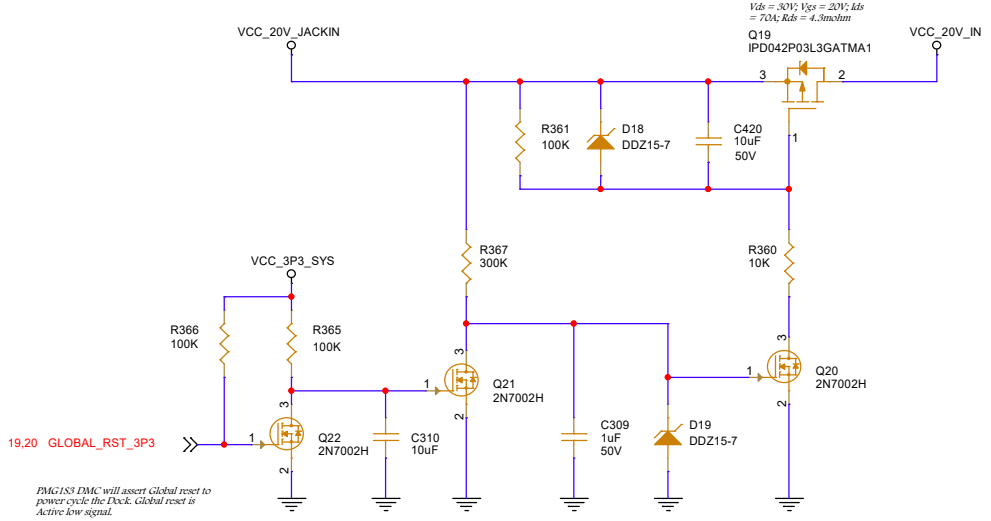

SYSTEM CURRENT SENSE

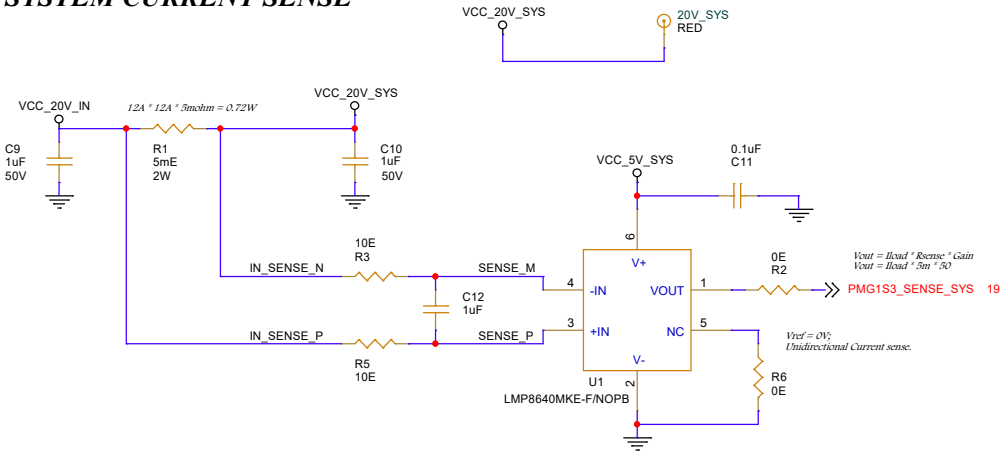

Legal Disclaimer :
The information given in this document shall in no event be regarded as a guarantee of conditions or characteristics. With respect to any examples or hints given herein, any typical values stated herein and/or any information regarding the application of the device, Infineon Technologies hereby disclaims any and all warranties and liabilities of any kind, including without limitation, warranties of non-infringement of intellectual property rights of any third party.

SCH Title :	EZ-PD PMG1-S3 USB-C Dock
Page Title:	INPUT POWER & CURRENT SENSE

Size	Document Number	Drawn By	Approved By	Rev
A3	<Doc>	ROHITH YADAV	GUBILI	03

Date: Wednesday, September 27, 2023 Sheet 4 of 22

5V SYS REGULATOR - 8A

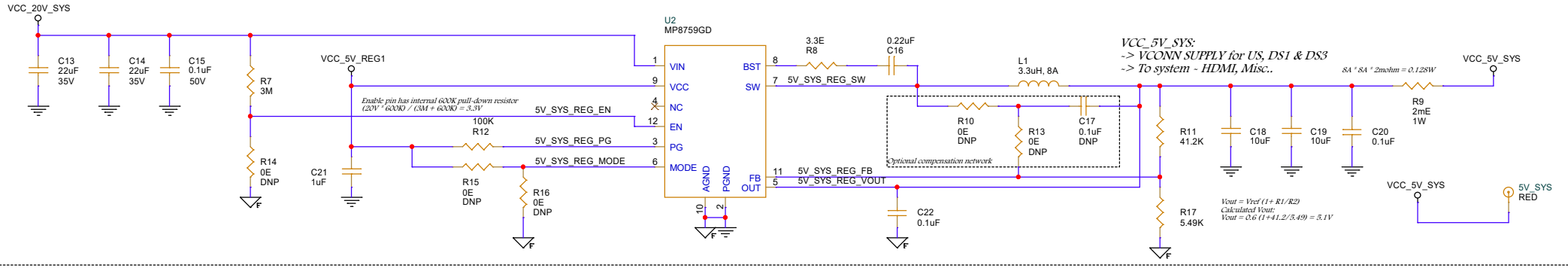

3.3V SYS REGULATOR - 2A

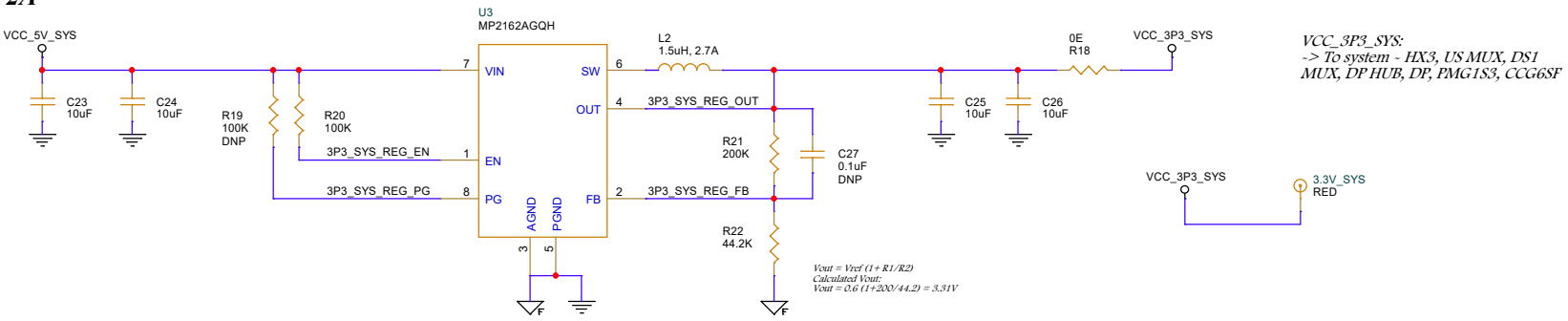

1V VMM5320 REGULATOR - 2A

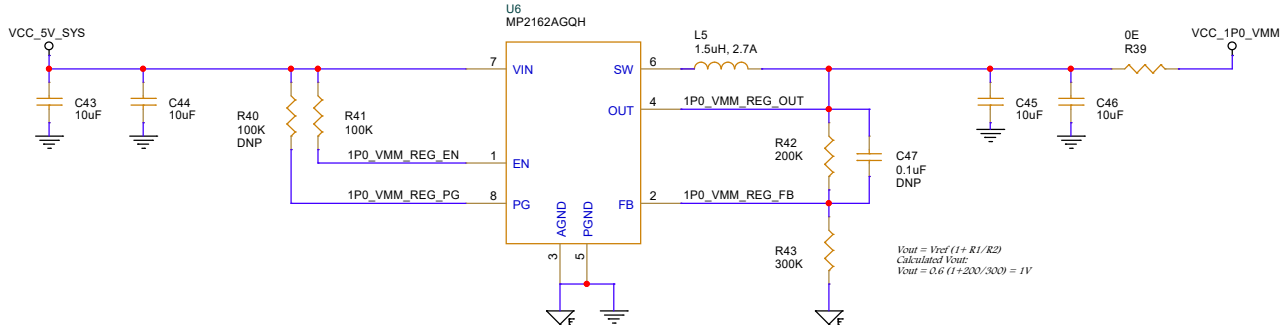

1.2V ANX MUX REGULATOR - 1A

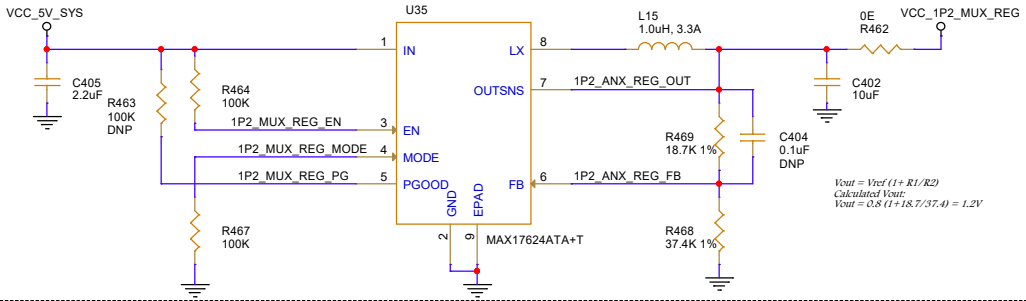

Legal Disclaimer :
The information given in this document shall in no event be regarded as a guarantee of conditions or characteristics. With respect to any examples or hints given herein, any typical values stated herein and/or any information regarding the application of the device, Infineon Technologies hereby disclaims any and all warranties and liabilities of any kind, including without limitation, warranties of non-infringement of intellectual property rights of any third party.

SCH Title :	*EZ-PD PMG1-S3 USB-C Dock*
Page Title:	*SYSTEM REGULATOR - 5V, 3.3V, 1.2V*

Size	Document Number	Drawn By	Approved By	Rev
A3	<Doc>	ROHITH YADAV	GURLI	03

Date: Wednesday, September 27, 2023 Sheet 5 of 22

5V PORT REGULATOR - 8A

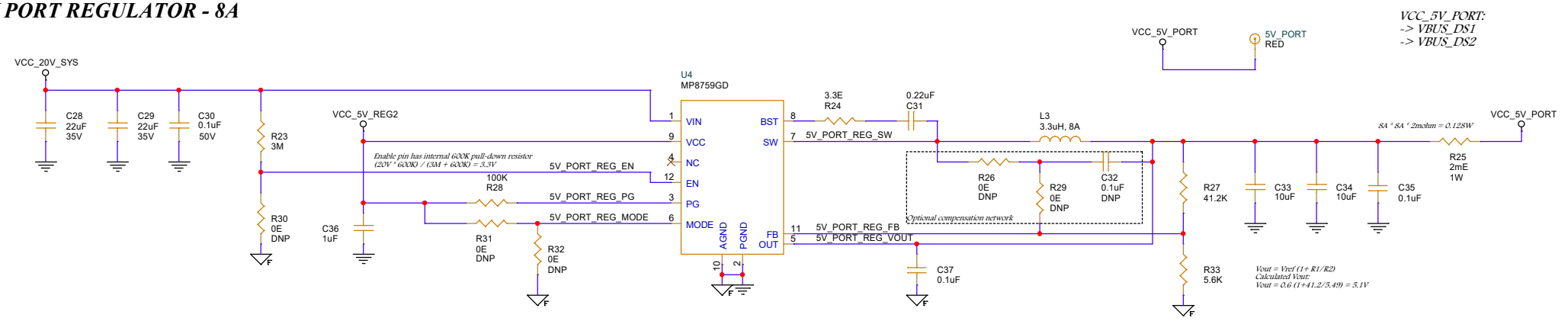

1.2V HX3 REGULATOR - 2A

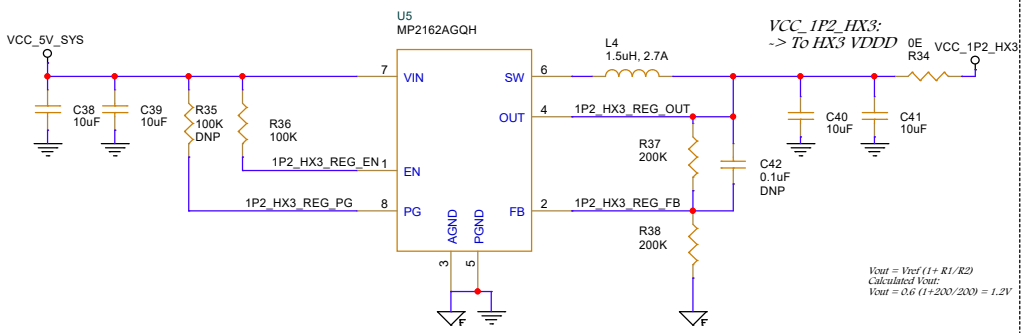

1.8V ANX7443 LDO

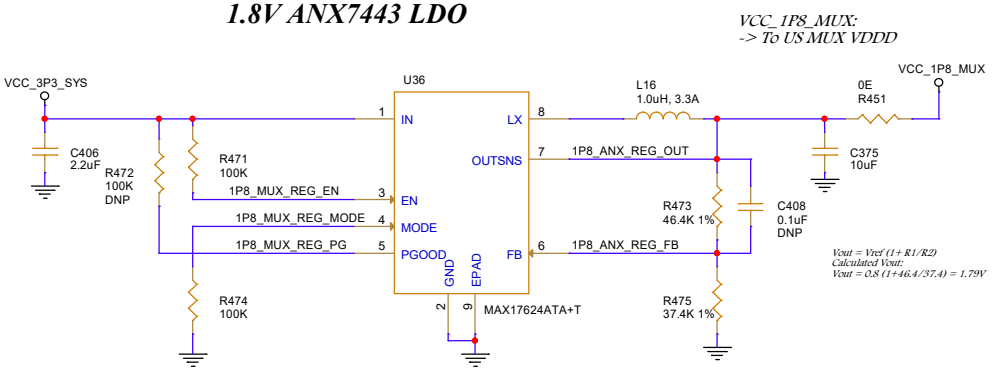

DS1 PROVIDER PATH

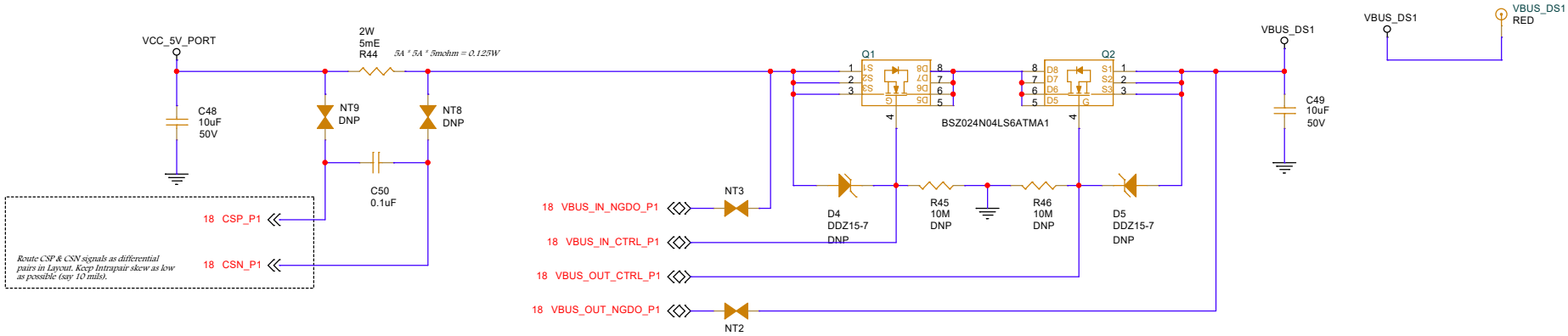

Legal Disclaimer :
The information given in this document shall in no event be regarded as a guarantee of conditions or characteristics. With respect to any examples or hints given herein, any typical values stated herein and/or any information regarding the application of the device, Infineon Technologies hereby disclaims any and all warranties and liabilities of any kind, including without limitation, warranties of non-infringement of intellectual property rights of any third party.

SCH Title :	EZ-PD PMG1-S3 USB-C Dock
Page Title:	REGULATOR - 5V, 1V & DS1 PROVIDER PATH

Size	Document Number	Drawn By	Approved By	Rev
A3	<Doc>	ROHITH YADAV	GUBILI	03

Date: Tuesday, February 27, 2024 Sheet 6 of 22

HX3 - POWER

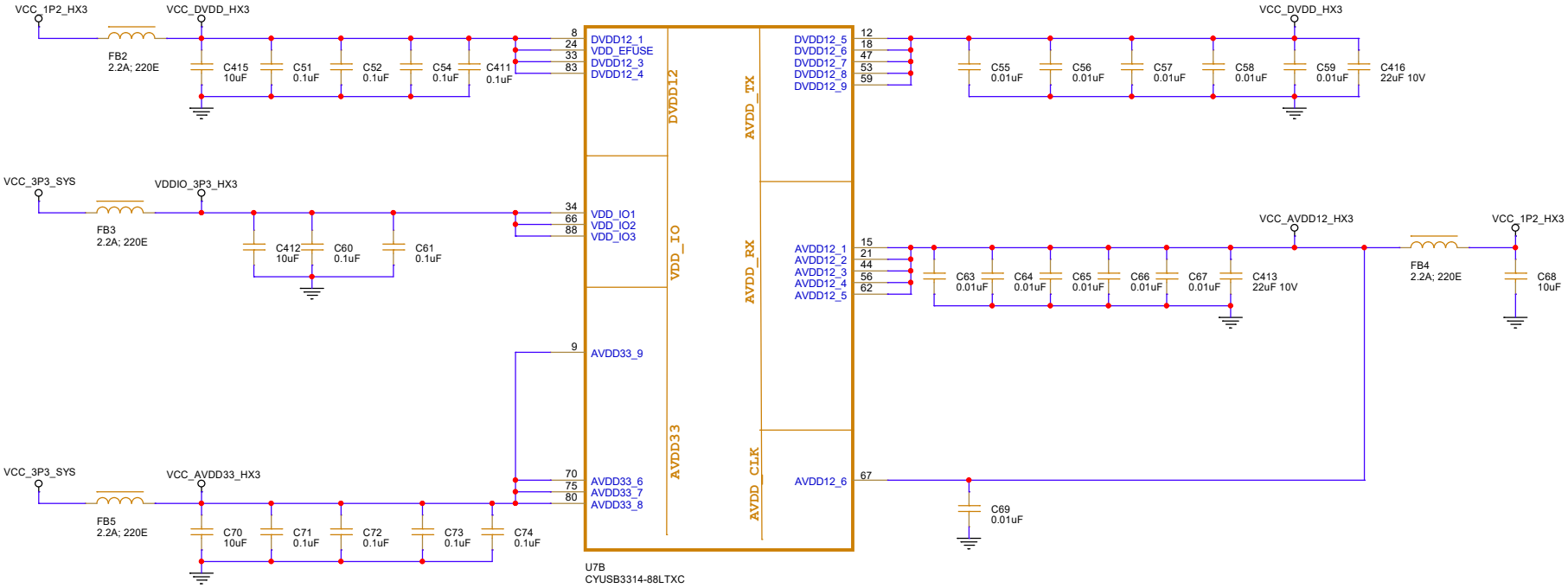

HX3 - GPIO

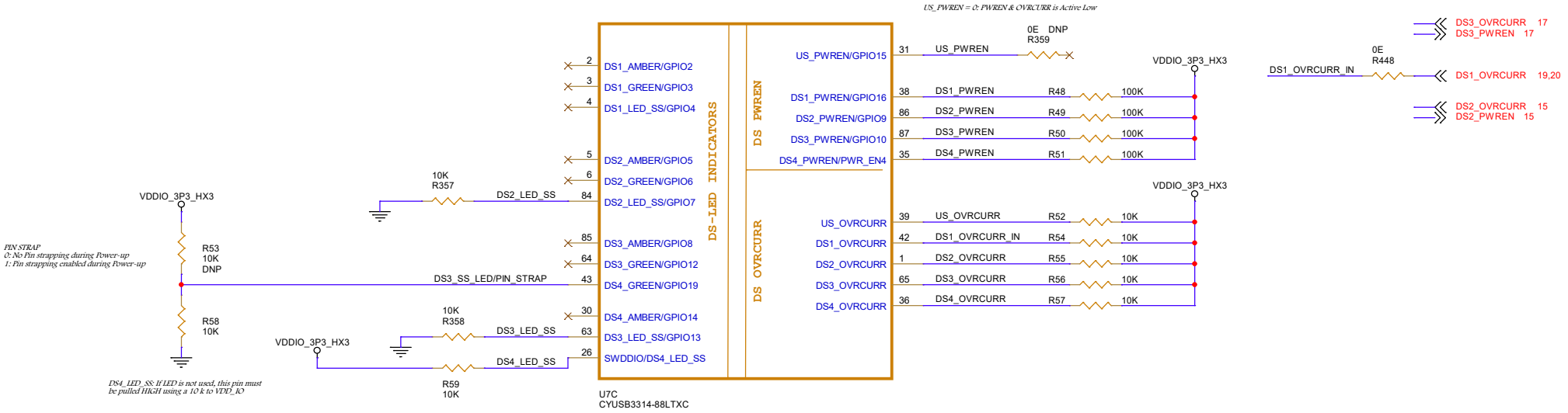

Legal Disclaimer :
The information given in this document shall in no event be regarded as a guarantee of conditions or characteristics. With respect to any examples or hints given herein, any typical values stated herein and/or any information regarding the application of the device, Infineon Technologies hereby disclaims any and all warranties and liabilities of any kind, including without limitation, warranties of non-infringement of intellectual property rights of any third party.

SCH Title :	*EZ-PD PMG1-S3 USB-C Dock*
Page Title:	*HX3 - POWER & GPIO*

Size	Document Number	Drawn By	Approved By	Rev
A3	<Doc>	ROHITH YADAV	GUBILI	03

Date: Wednesday, September 27, 2023 Sheet 7 of 22

HX3 - CLK & SS

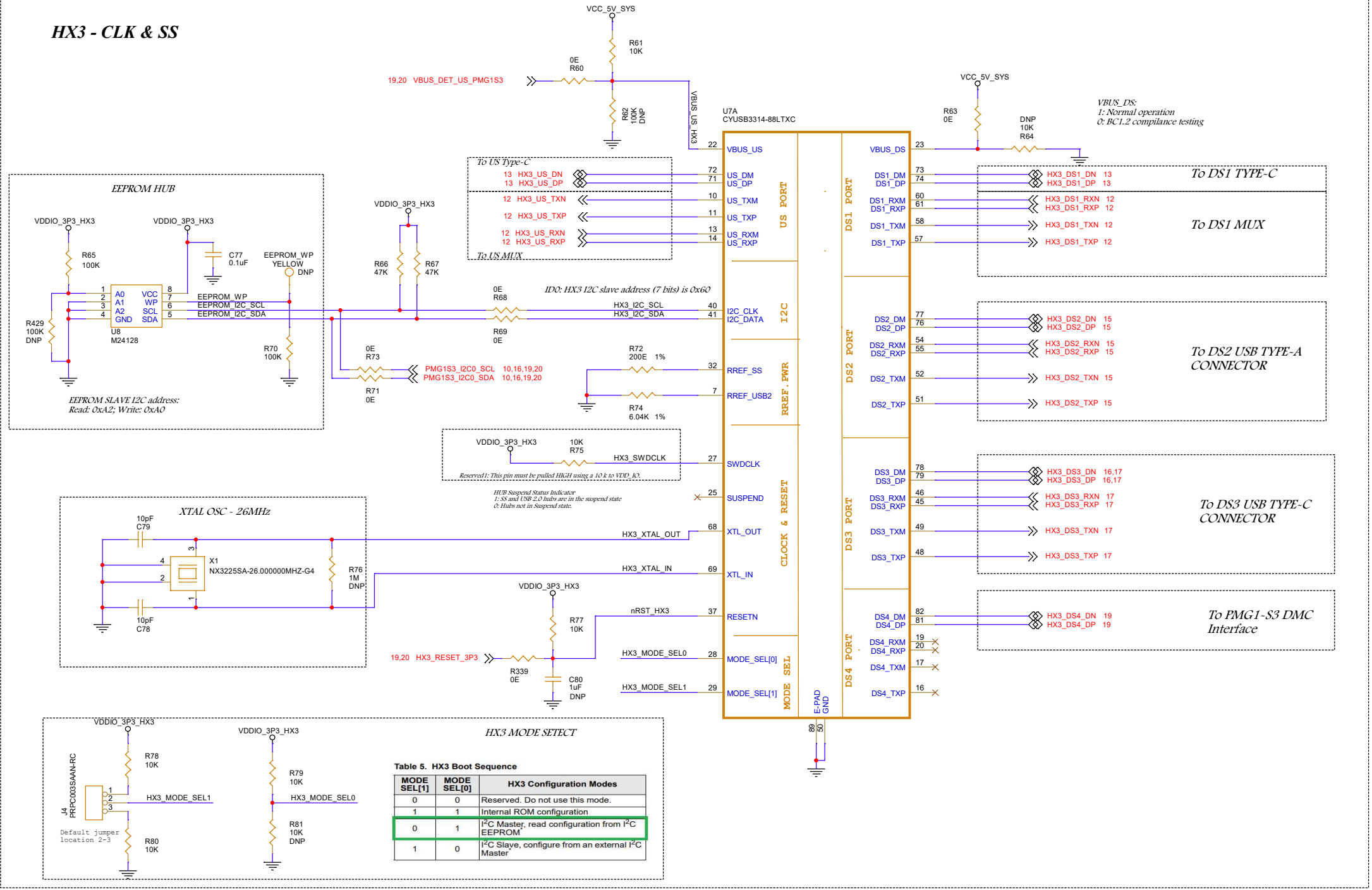

Table 5. HX3 Boot Sequence

MODE SEL[1]	MODE SEL[0]	HX3 Configuration Modes
0	0	Reserved. Do not use this mode.
1	1	Internal ROM configuration
0	1	I^2C Master, read configuration from I^2C EEPROM
1	0	I^2C Slave, configure from an external I^2C Master

Legal Disclaimer :
The information given in this document shall in no event be regarded as a guarantee of conditions or characteristics. With respect to any examples or hints given herein, any typical values stated herein and/or any information regarding the application of the device, Infineon Technologies hereby disclaims any and all warranties and liabilities of any kind, including without limitation, warranties of non-infringement of intellectual property rights of any third party.

SCH Title :	*EZ-PD PMG1-S3 USB-C Dock*
Page Title:	*HX3 - CLK & USB SS*

Size	Document Number	Drawn By	Approved By	Rev
A3	<Doc>	ROHITH YADAV	GURLI	03

Date: Wednesday, September 27, 2023 Sheet 8 of 22

VMM5320 - PWR

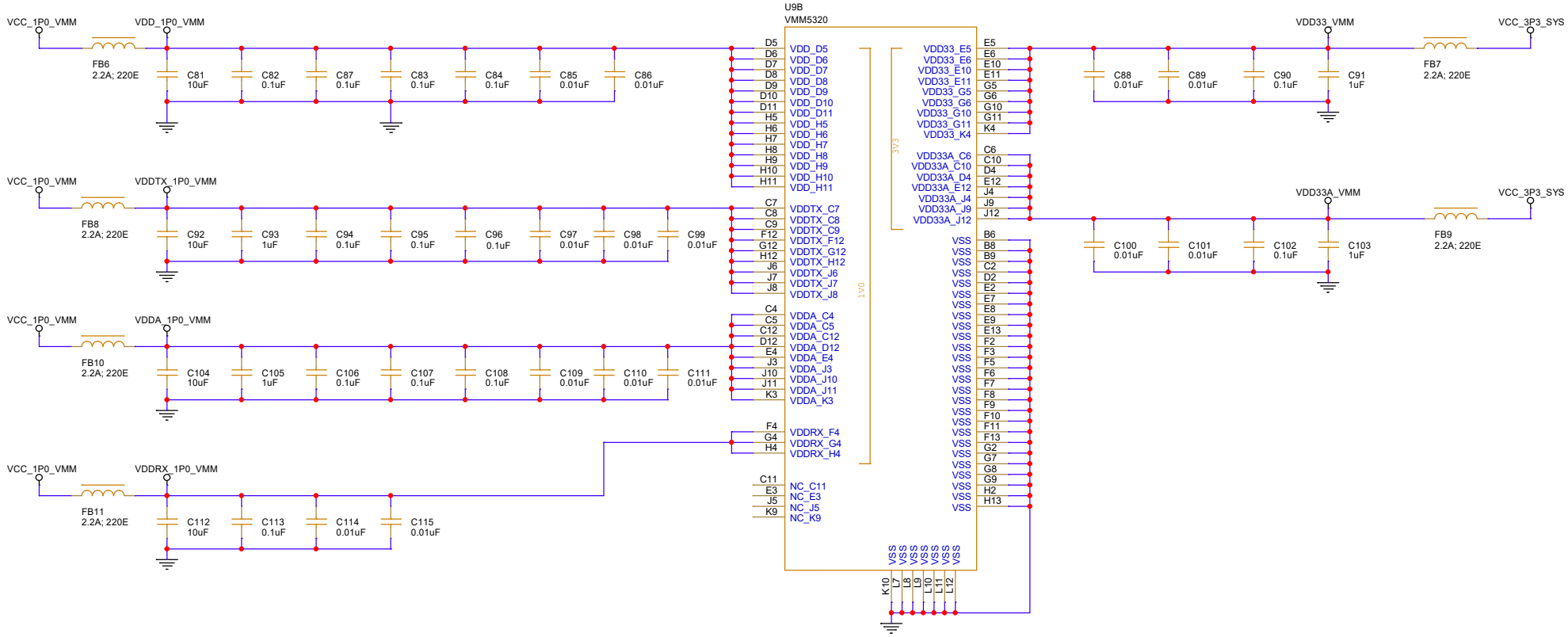

Legal Disclaimer :

The information given in this document shall in no event be regarded as a guarantee of conditions or characteristics. With respect to any examples or hints given herein, any typical values stated herein and/or any information regarding the application of the device, Infineon Technologies hereby disclaims any and all warranties and liabilities of any kind, including without limitation, warranties of non-infringement of intellectual property rights of any third party.

SCH Title : *EZ-PD PMG1-S3 USB-C Dock*				
Page Title: *VMM5320 HUB - POWER*				
Size: *A3*	Document Number: *<Doc>*	Drawn By: *ROHITH YADAV*	Approved By: *GURLI*	Rev: *03*
Date: *Wednesday, September 27, 2023*		Sheet *9* of *22*		

VMM5320 - SIGNALS

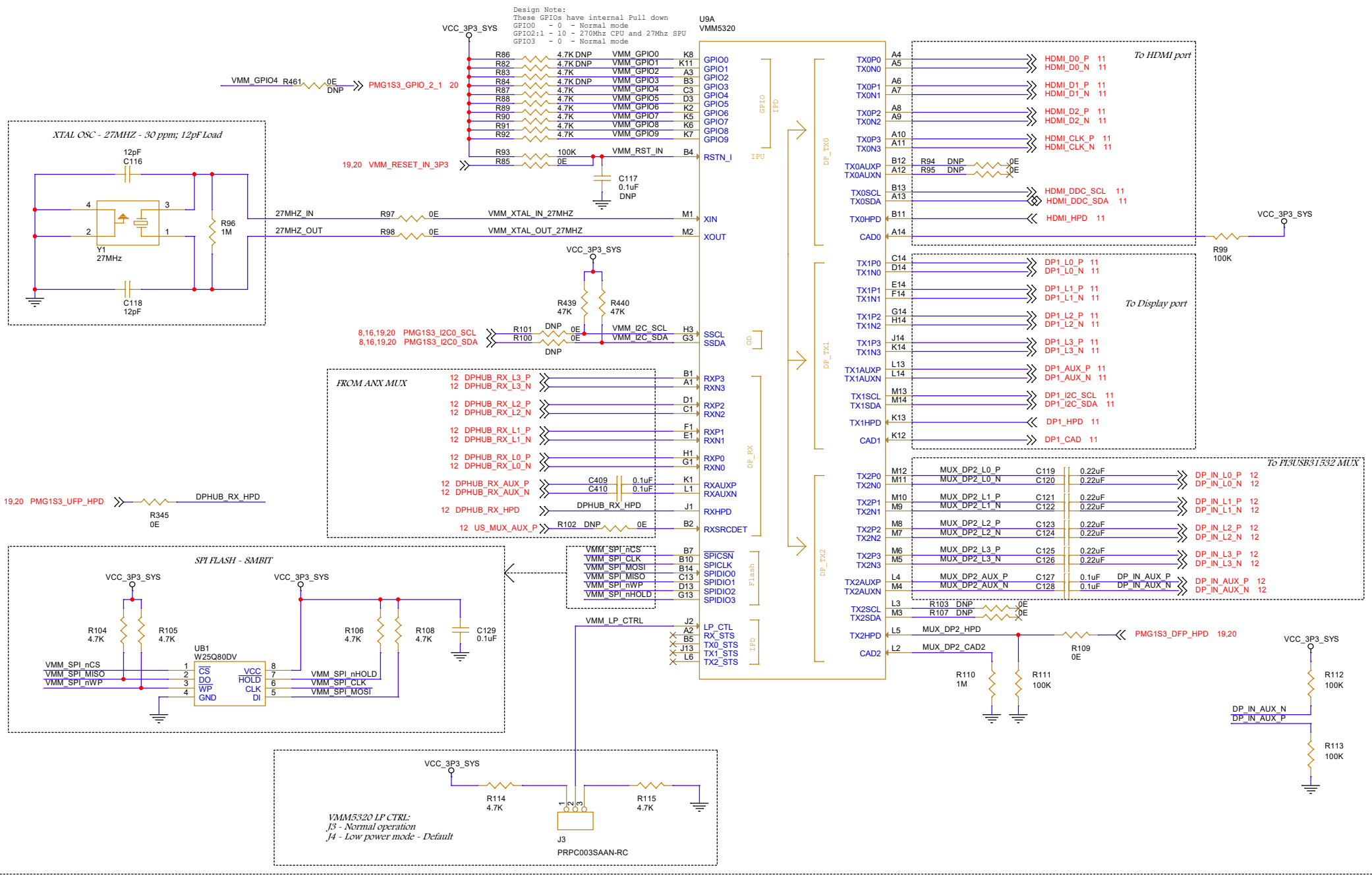

Legal Disclaimer :
The information given in this document shall in no event be regarded as a guarantee of conditions or characteristics. With respect to any examples or hints given herein, any typical values stated herein and/or any information regarding the application of the device, Infineon Technologies hereby disclaims any and all warranties and liabilities of any kind, including without limitation, warranties of non-infringement of intellectual property rights of any third party.

SCH Title :	EZ-PD PMG1-S3 USB-C Dock
Page Title:	VMM5320 HUB - SIGNALS

Size	Document Number	Drawn By	Approved By	Rev
A3	<Doc>	ROHITH YADAV	GUBILI	03

Date: Wednesday, September 27, 2023 Sheet 10 of 22

HDMI

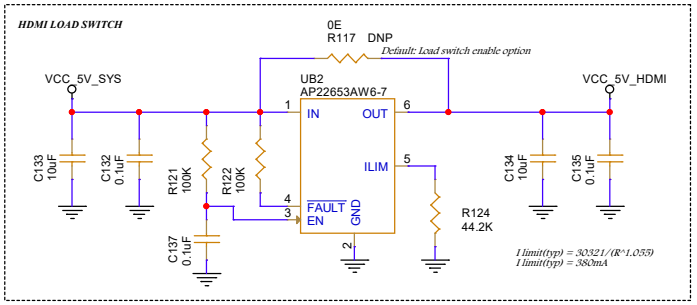

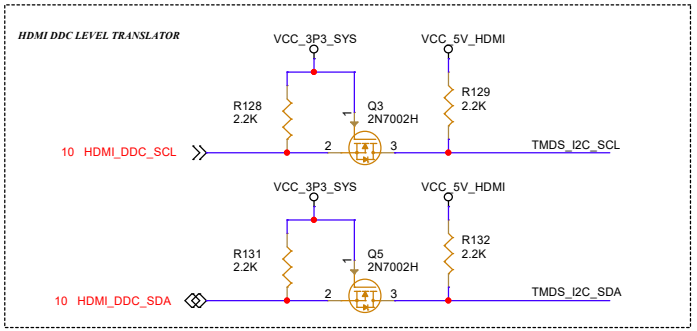

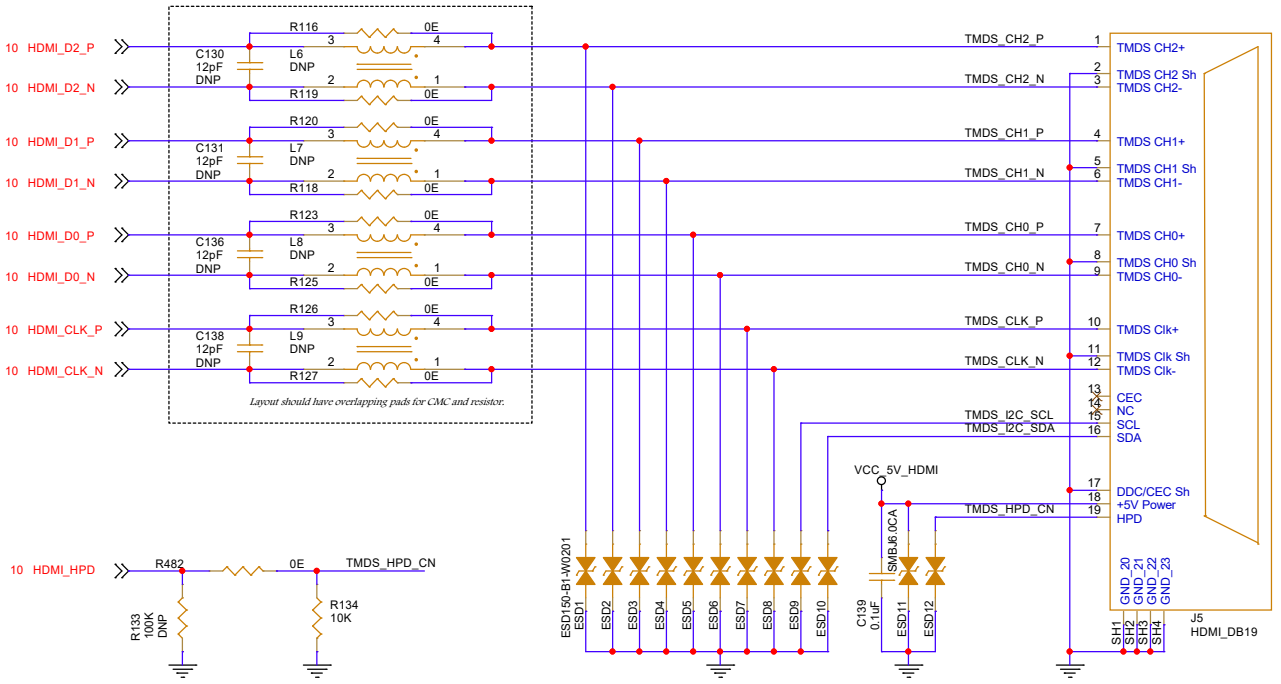

DISPLAY PORT

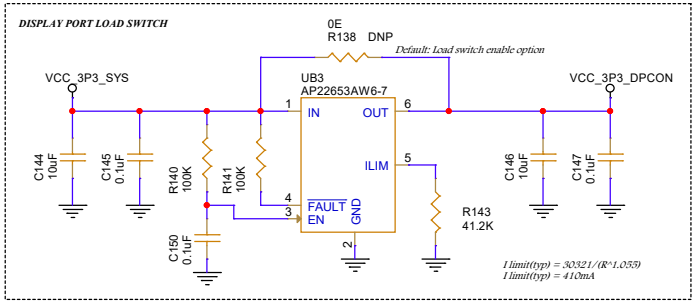

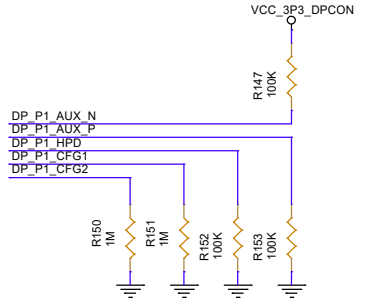

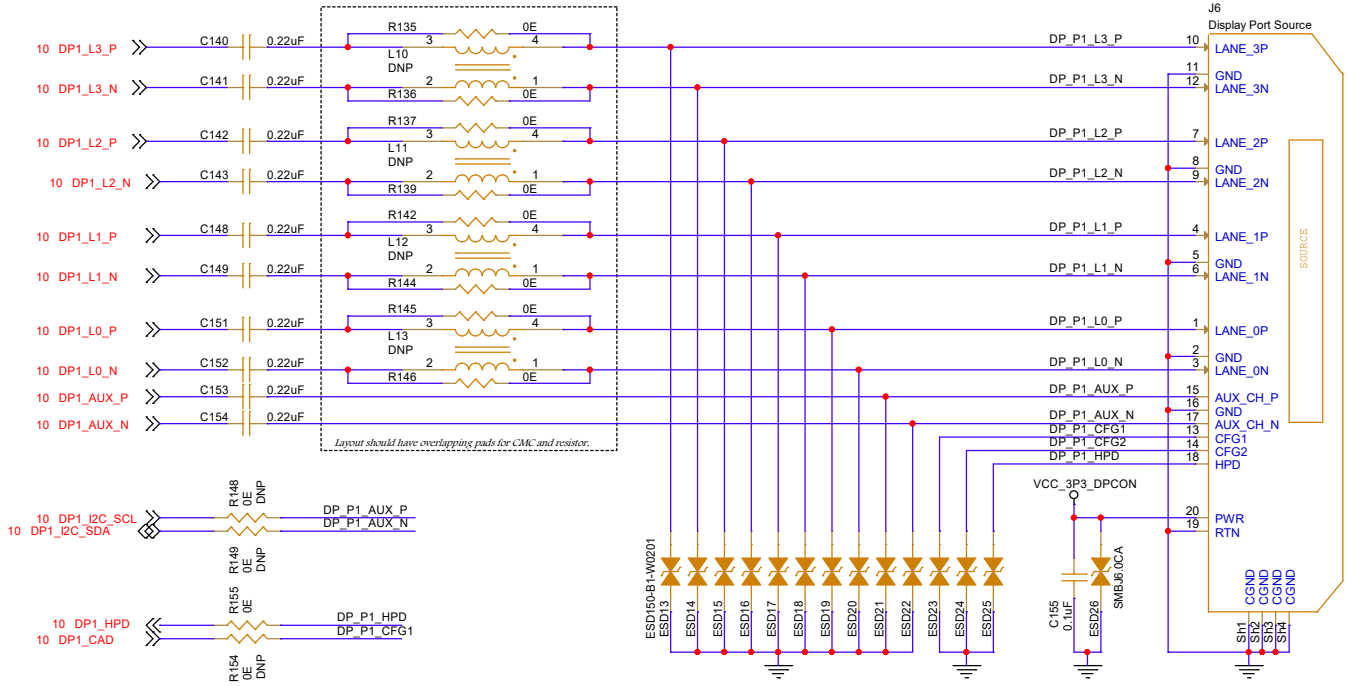

Legal Disclaimer :
The information given in this document shall in no event be regarded as a guarantee of conditions or characteristics. With respect to any examples or hints given herein, any typical values stated herein and/or any information regarding the application of the device, Infineon Technologies hereby disclaims any and all warranties and liabilities of any kind, including without limitation, warranties of non-infringement of intellectual property rights of any third party.

SCH Title : *EZ-PD PMG1-S3 USB-C Dock*				
Page Title: *DP & HDMI CONNECTOR*				
Size: *A3*	Document Number: *<Doc>*	Drawn By: *ROHITH YADAV*	Approved By: *GUBILI*	Rev: *03*
Date: *Wednesday, September 27, 2023*	Sheet *11* of *22*			

DS1 USB/DP MUX

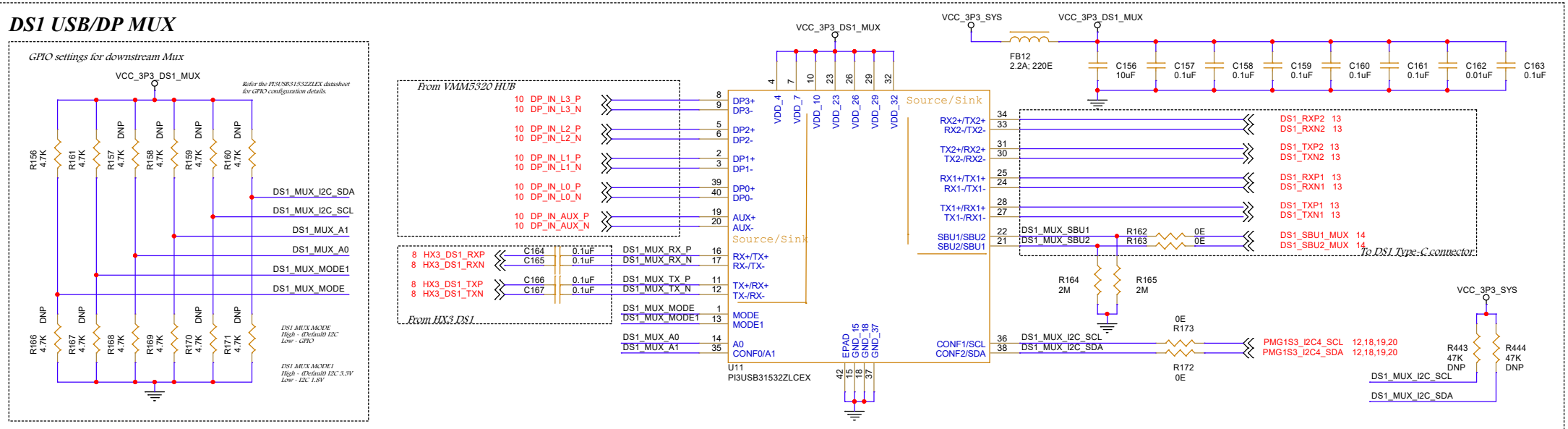

US USB/DP MUX

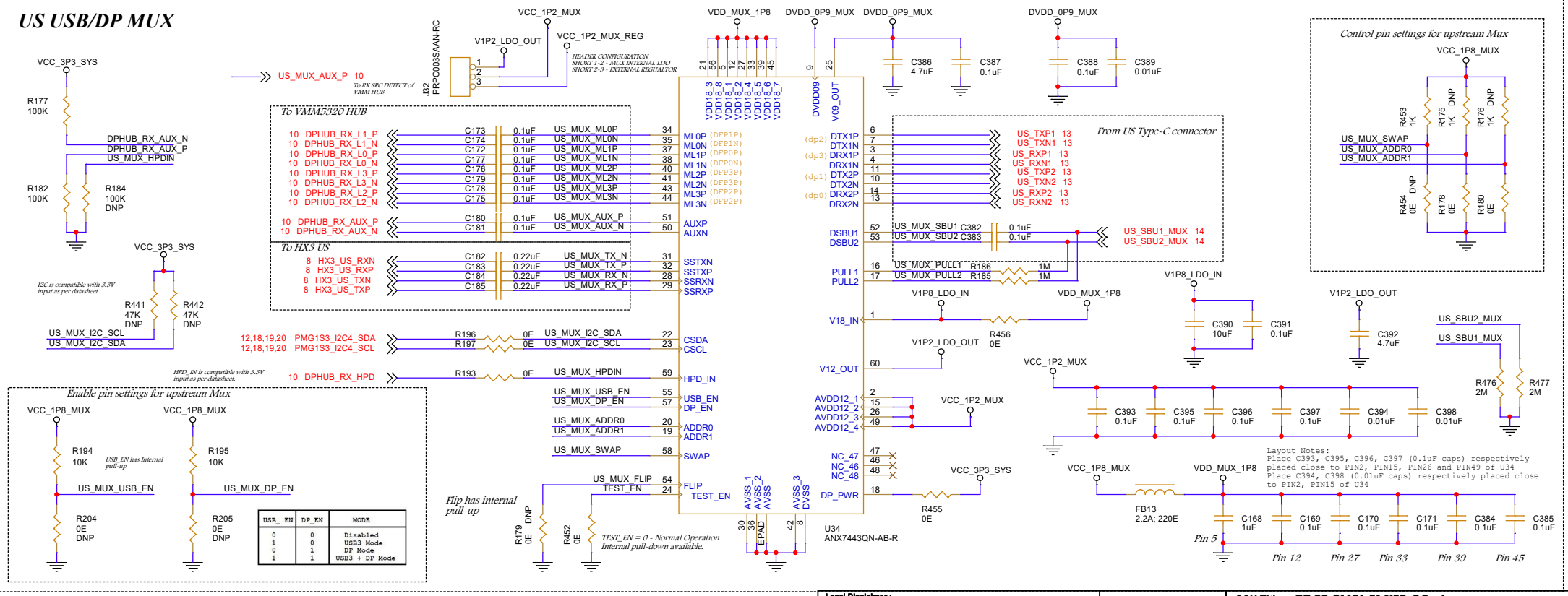

Legal Disclaimer :
The information given in this document shall in no event be regarded as a guarantee of conditions or characteristics. With respect to any examples or hints given herein, any typical values stated herein and/or any information regarding the application of the device, Infineon Technologies hereby disclaims any and all warranties and liabilities of any kind, including without limitation, warranties of non-infringement of intellectual property rights of any third party.

SCH Title : *EZ-PD PMG1-S3 USB-C Dock*				
Page Title: *USB MUX - US & DS1*				
Size: *A3*	Document Number: *<Doc>*	Drawn By: *ROHITH YADAV*	Approved By: *GURLI*	Rev: *03*
Date: *Wednesday, September 27, 2023*	Sheet *12* of *22*			

US PORT

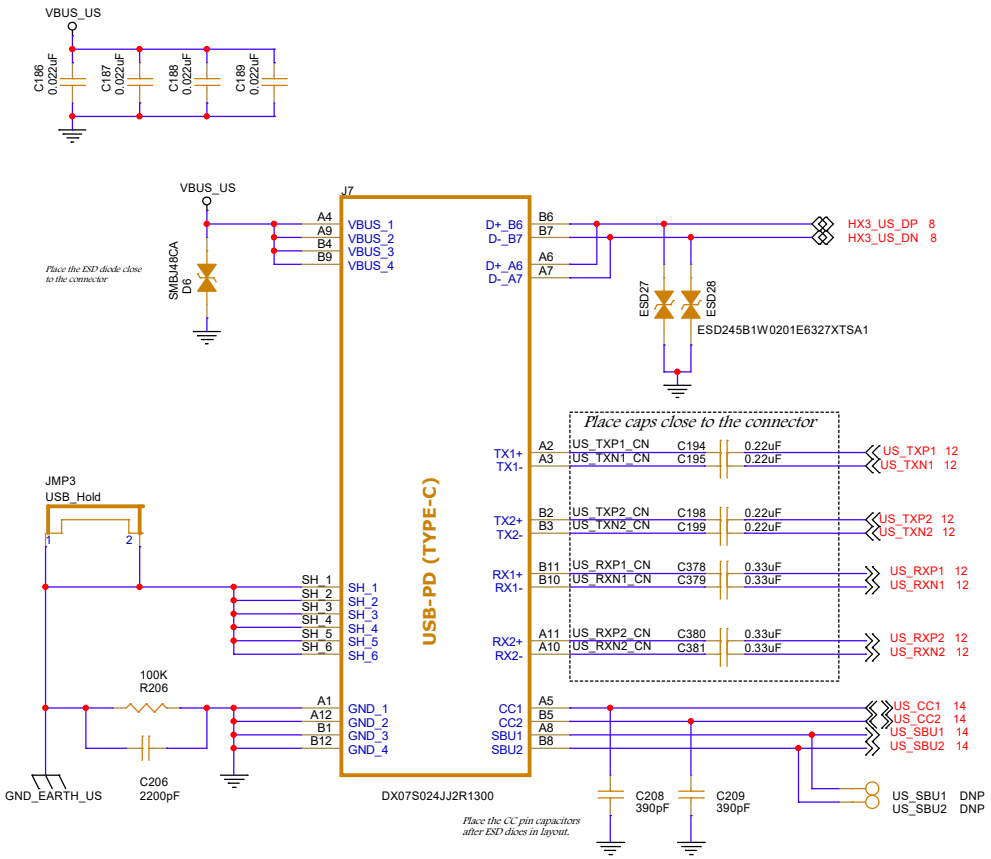

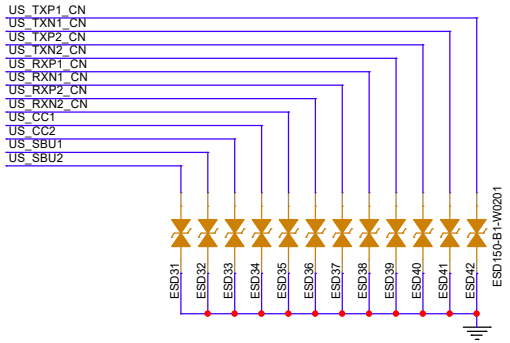

DS1 PORT

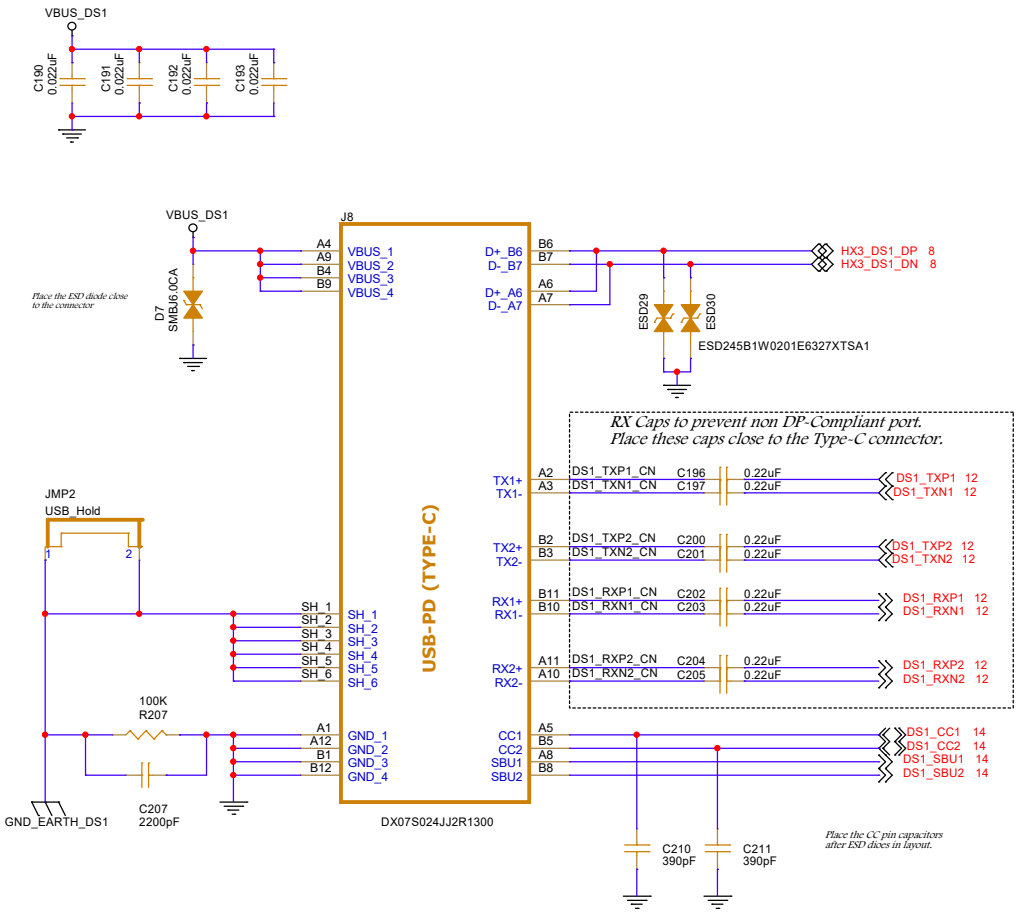

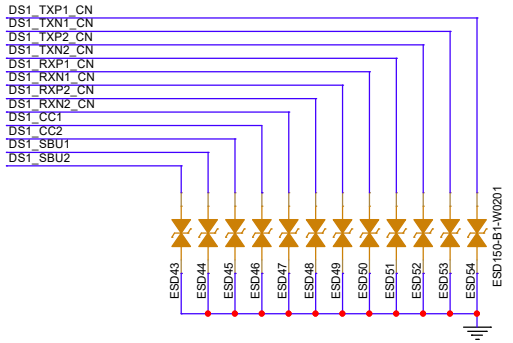

Legal Disclaimer :
The information given in this document shall in no event be regarded as a guarantee of conditions or characteristics. With respect to any examples or hints given herein, any typical values stated herein and/or any information regarding the application of the device, Infineon Technologies hereby disclaims any and all warranties and liabilities of any kind, including without limitation, warranties of non-infringement of intellectual property rights of any third party.

SCH Title :	*EZ-PD PMG1-S3 USB-C Dock*
Page Title:	*USB CONNECTOR - US & DS1*

Size	Document Number	Drawn By	Approved By	Rev
A3	<Doc>	ROHITH YADAV	GUBILI	03

Date: Wednesday, September 27, 2023 Sheet 13 of 22

VCC - CC SHORT PROTECTION - US PORT



VCC - SBU SHORT PROTECTION - US PORT

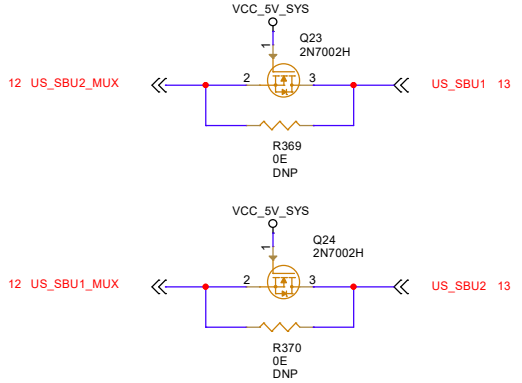

VCC - CC SHORT PROTECTION - DS1 PORT

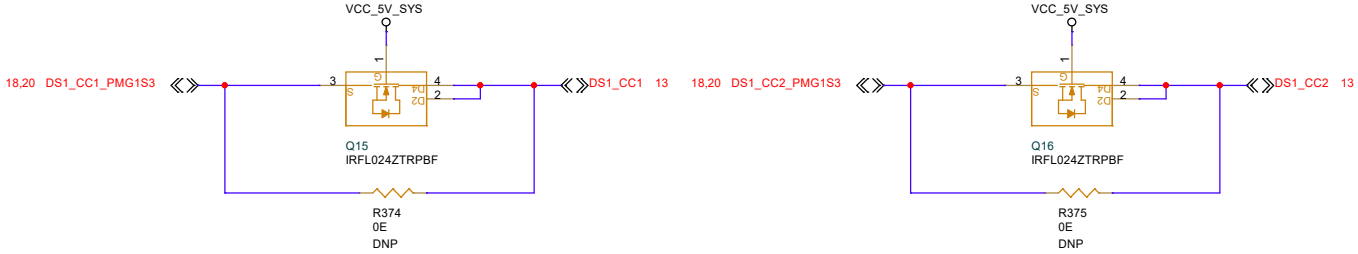

VCC - SBU SHORT PROTECTION - DS1 PORT

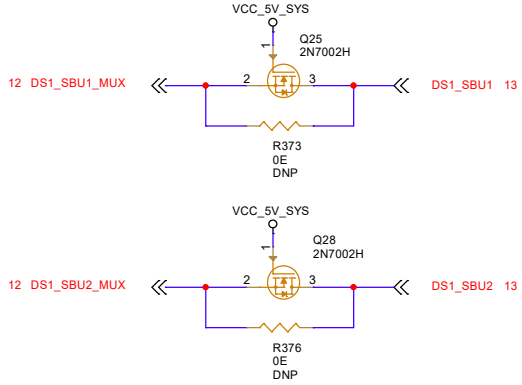

Legal Disclaimer :
The information given in this document shall in no event be regarded as a guarantee of conditions or characteristics. With respect to any examples or hints given herein, any typical values stated herein and/or any information regarding the application of the device, Infineon Technologies hereby disclaims any and all warranties and liabilities of any kind, including without limitation, warranties of non-infringement of intellectual property rights of any third party.

SCH Title : *EZ-PD PMG1-S3 USB-C Dock*				
Page Title: *CC & SBU PROTECTION*				
Size: *A3*	Document Number: *<Doc>*	Drawn By: *ROHITH YADAV*	Approved By: *GURLI*	Rev: *03*
Date: *Thursday, February 29, 2024*		Sheet *14* of *22*		

DS2 TYPE-A CONNECTOR

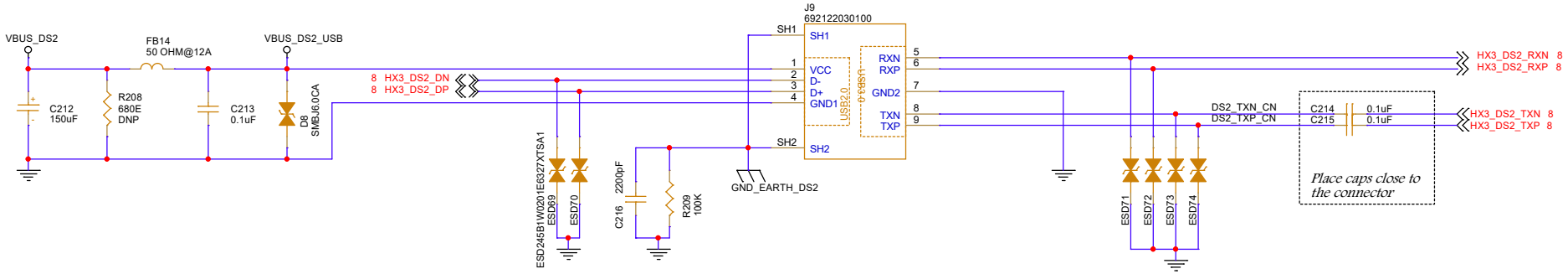

VBUS_DS2 POWER SWITCH

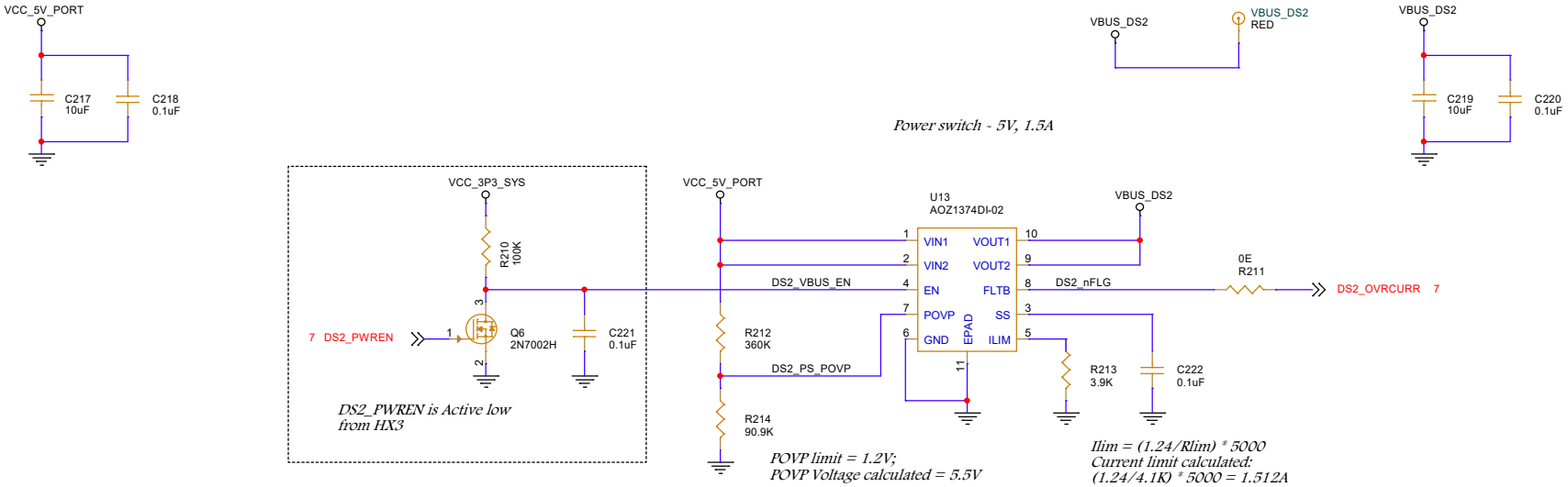

Legal Disclaimer :
The information given in this document shall in no event be regarded as a guarantee of conditions or characteristics. With respect to any examples or hints given herein, any typical values stated herein and/or any information regarding the application of the device, Infineon Technologies hereby disclaims any and all warranties and liabilities of any kind, including without limitation, warranties of non-infringement of intellectual property rights of any third party.

SCH Title : *EZ-PD PMG1-S3 USB-C Dock*				
Page Title: *DS2 CONNECTOR & POWER SWITCH*				
Size	Document Number	Drawn By	Approved By	Rev
A3	*<Doc>*	*ROHITH YADAV*	*GURLI*	*03*
Date:	*Wednesday, September 27, 2023*	Sheet	*15* of *22*	

CCG7SC

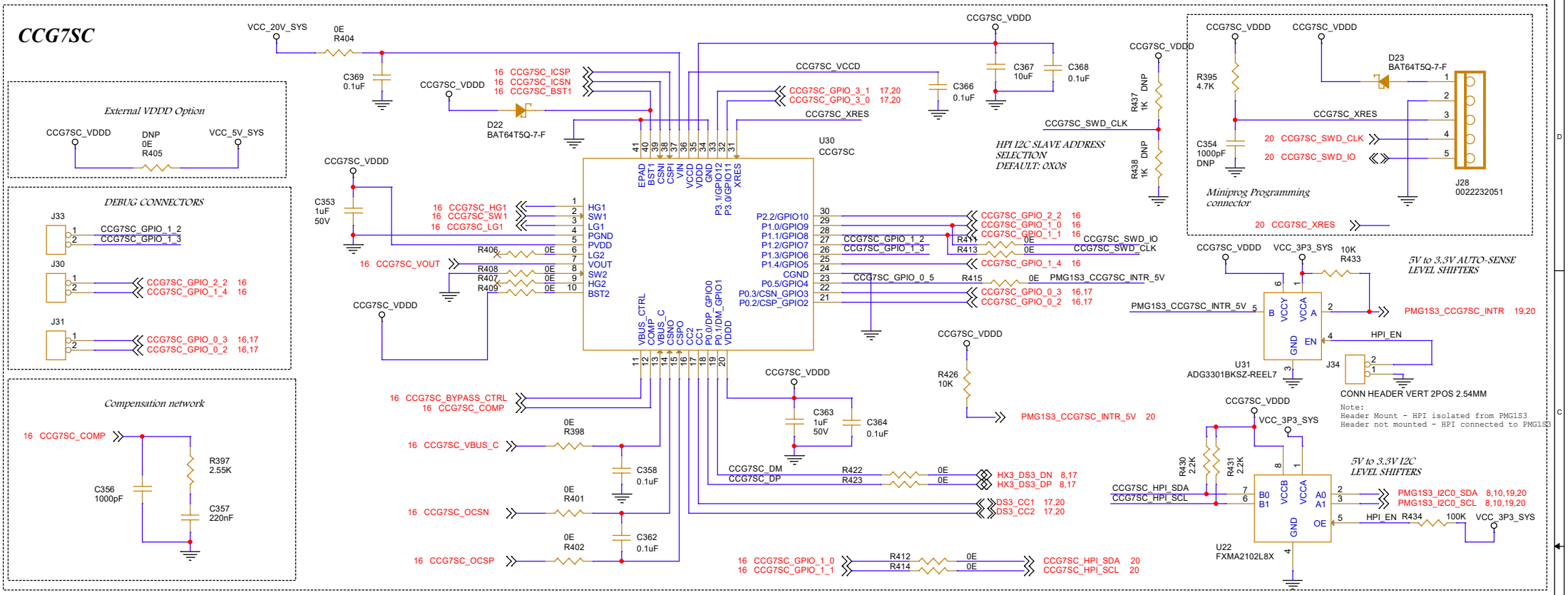

CCG7SC POWER SECTION

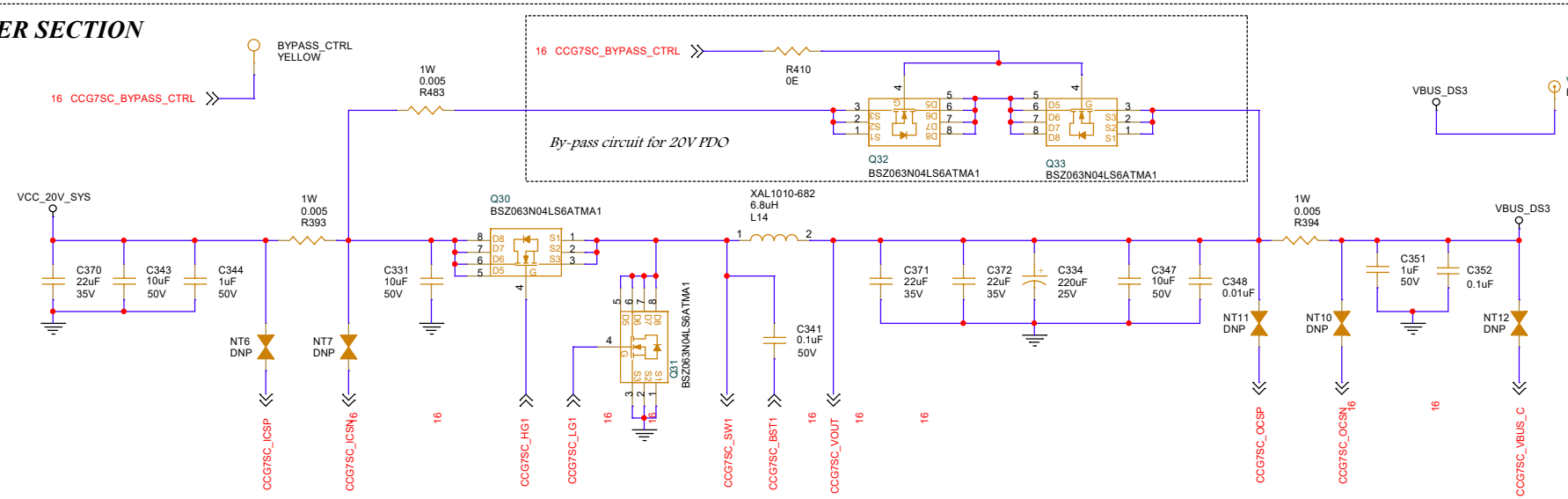

Legal Disclaimer :
The information given in this document shall in no event be regarded as a guarantee of conditions or characteristics. With respect to any examples or hints given herein, any typical values stated herein and/or any information regarding the application of the device, Infineon Technologies hereby disclaims any and all warranties and liabilities of any kind, including without limitation, warranties of non-infringement of intellectual property rights of any third party.

SCH Title : *EZ-PD PMG1-S3 USB-C Dock*				
Page Title: *CCG7SC - POWER SECTION*				
Size: A3	Document Number: <Doc>	Drawn By: ROHITH YADAV	Approved By: GURLI	Rev: 03
Date: Wednesday, September 27, 2023	Sheet 16 of 22			

DS3 PORT

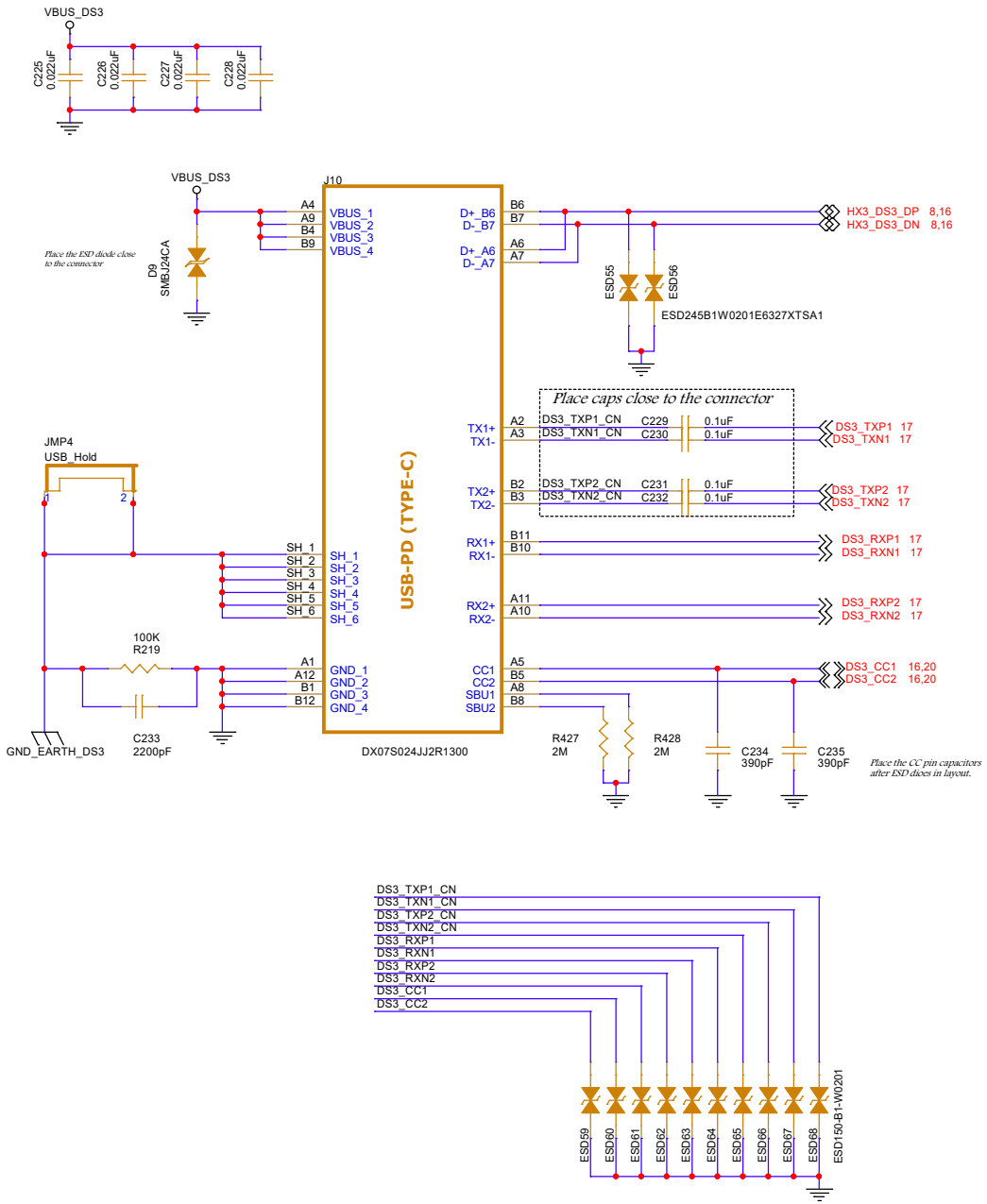

DS3 USB SWITCH

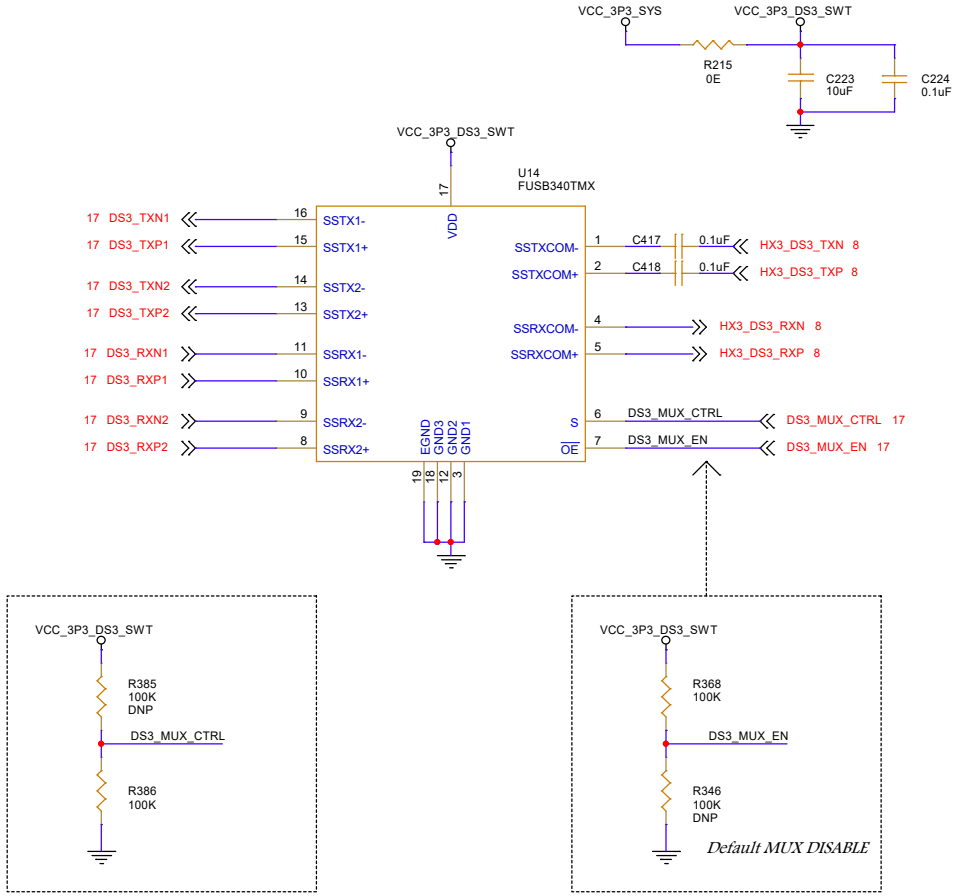

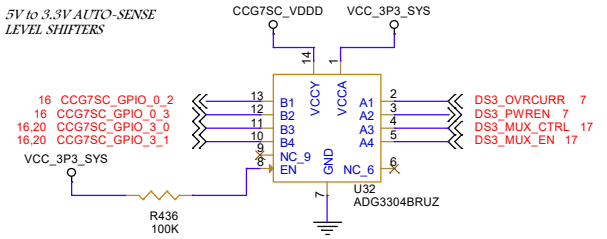

Legal Disclaimer :
The information given in this document shall in no event be regarded as a guarantee of conditions or characteristics. With respect to any examples or hints given herein, any typical values stated herein and/or any information regarding the application of the device, Infineon Technologies hereby disclaims any and all warranties and liabilities of any kind, including without limitation, warranties of non-infringement of intellectual property rights of any third party.

SCH Title : *EZ-PD PMG1-S3 USB-C Dock*				
Page Title: *DS3 CONNECTOR & USB SWITCH*				
Size: *A3*	Document Number: *<Doc>*	Drawn By: *ROHITH YADAV*	Approved By: *GUBILI*	Rev: *03*
Date: *Wednesday, September 27, 2023*		Sheet *17* of *22*		

PMG1S3 - PORT

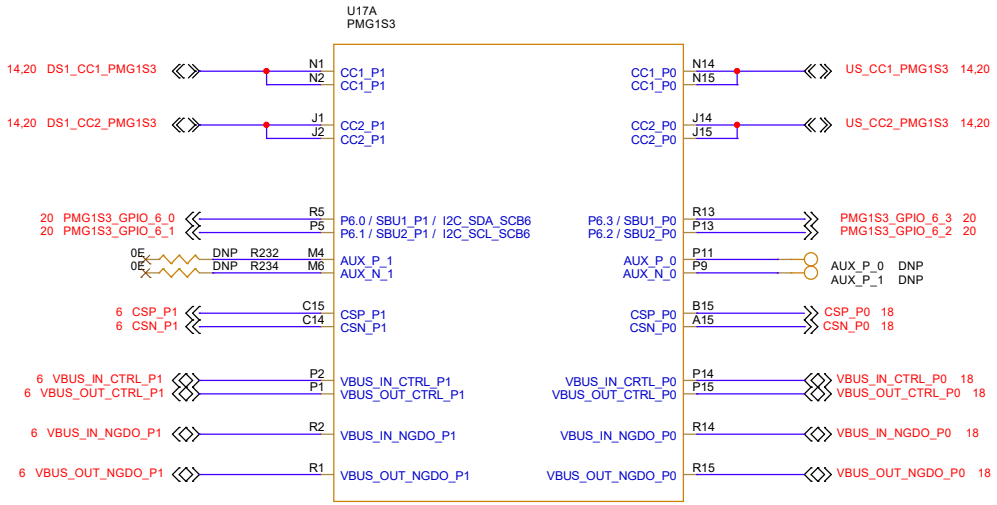

INTERCONNECT BOARD CONNECTOR

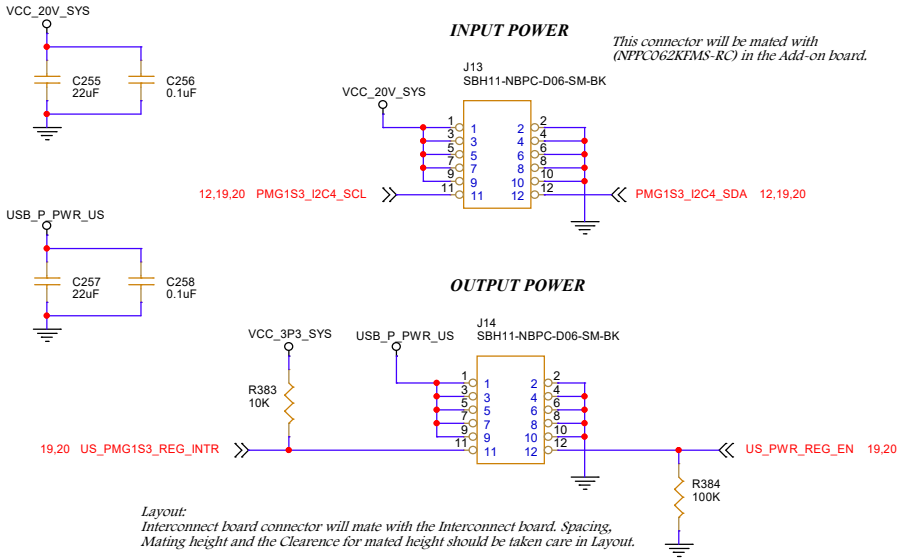

US PROVIDER PATH & CURRENT SENSE

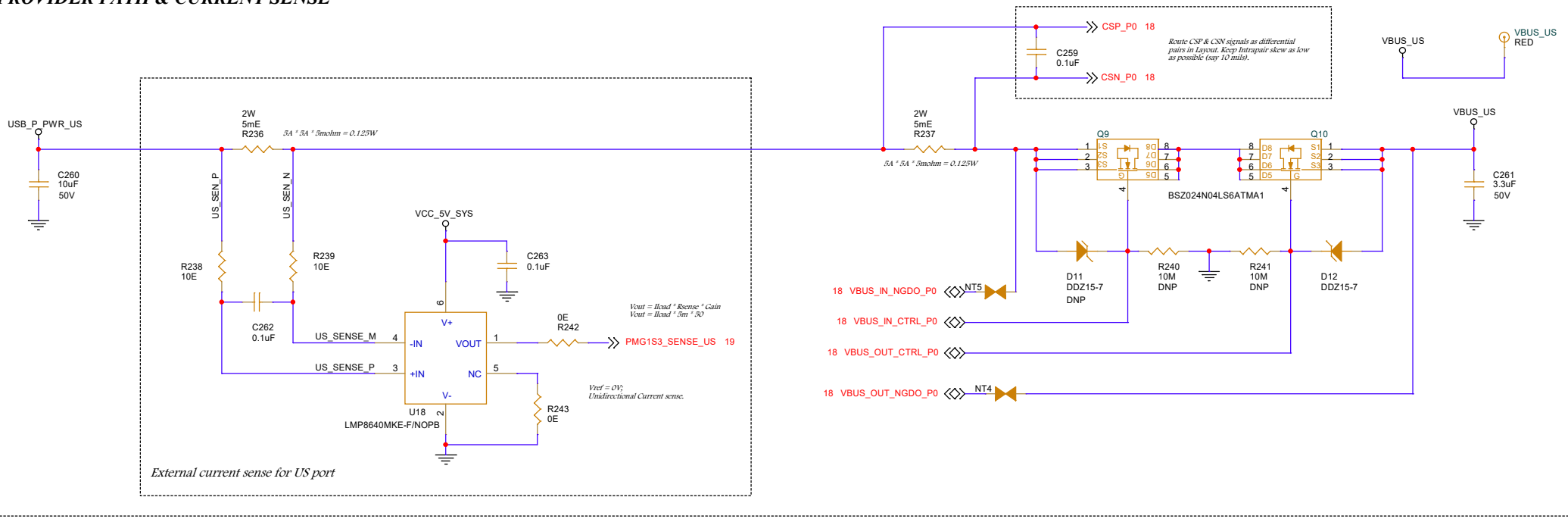

Legal Disclaimer :
The information given in this document shall in no event be regarded as a guarantee of conditions or characteristics. With respect to any examples or hints given herein, any typical values stated herein and/or any information regarding the application of the device, Infineon Technologies hereby disclaims any and all warranties and liabilities of any kind, including without limitation, warranties of non-infringement of intellectual property rights of any third party.

SCH Title :	EZ-PD PMG1-S3 USB-C Dock
Page Title:	PMG1S3 - PORT0 & PORT1

Size	Document Number	Drawn By	Approved By	Rev
A3	<Doc>	ROHITH YADAV	GUBILI	03

Date: Wednesday, September 27, 2023 Sheet 18 of 22

PMG1S3 - PWR

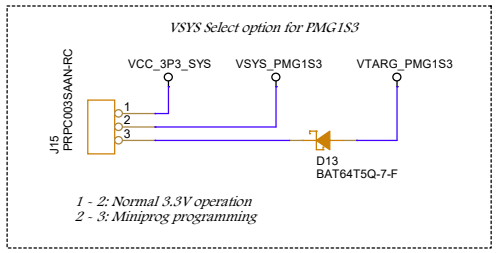

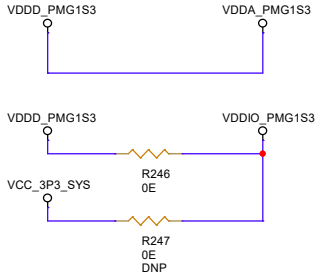

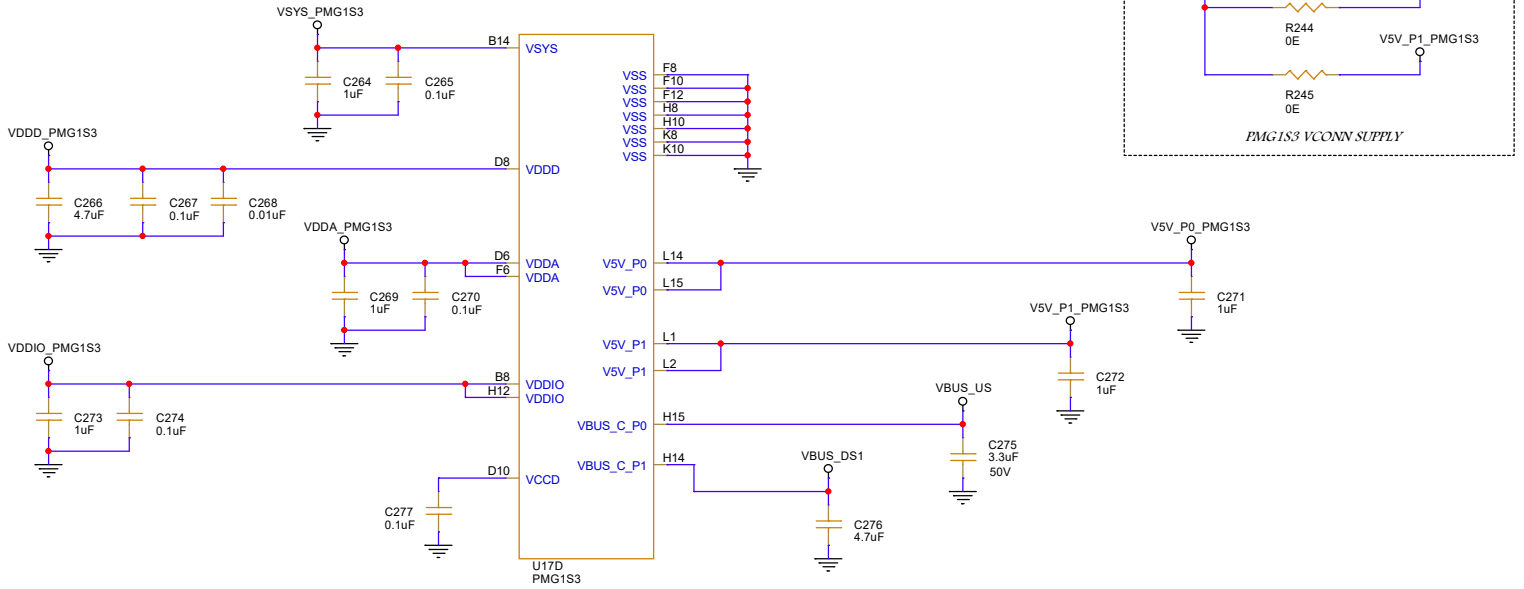

PMG1S3 - GPIO

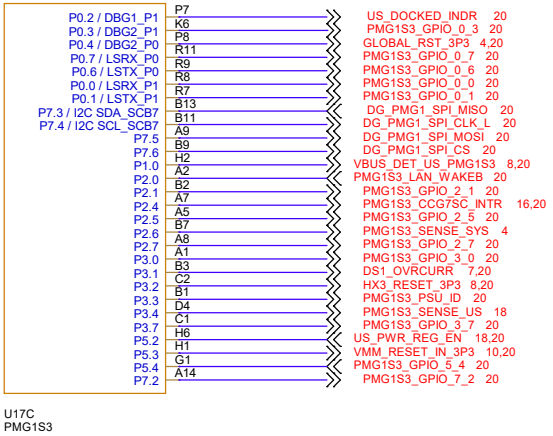

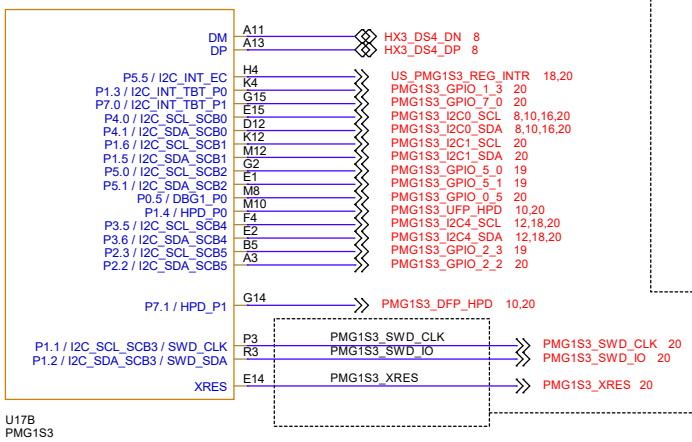

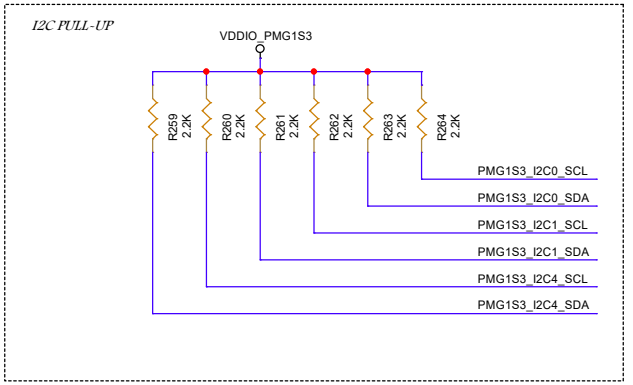

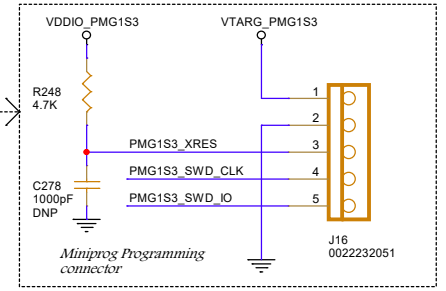



Legal Disclaimer :
The information given in this document shall in no event be regarded as a guarantee of conditions or characteristics. With respect to any examples or hints given herein, any typical values stated herein and/or any information regarding the application of the device, Infineon Technologies hereby disclaims any and all warranties and liabilities of any kind, including without limitation, warranties of non-infringement of intellectual property rights of any third party.

SCH Title :	*EZ-PD PMG1-S3 USB-C Dock*
Page Title:	*PMG1S3 - PWR & GPIO*

Size	Document Number	Drawn By	Approved By	Rev
A3	<Doc>	ROHITH YADAV	GUBILI	03

Date: Wednesday, September 27, 2023 Sheet 19 of 22

DEBUG HEADER - PMG1S3

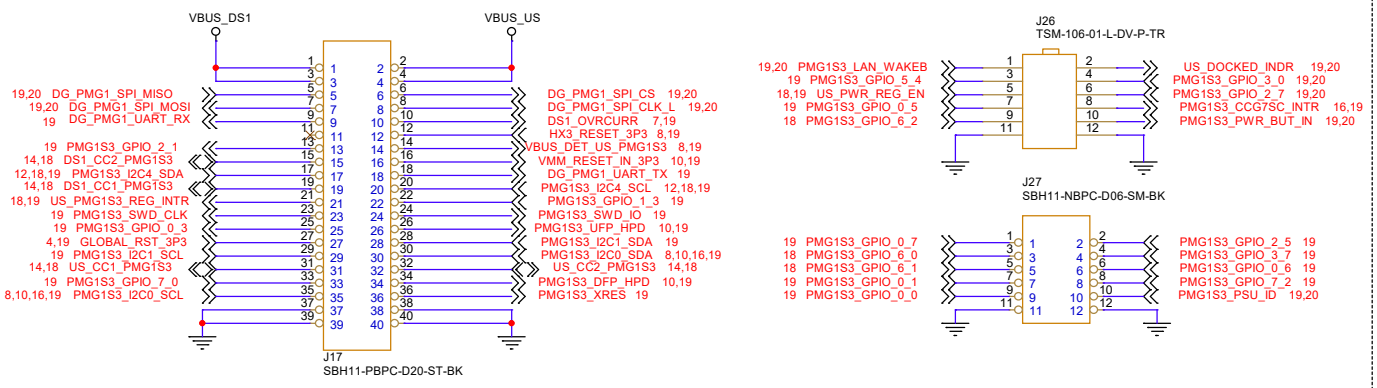

PUSH BUTTON

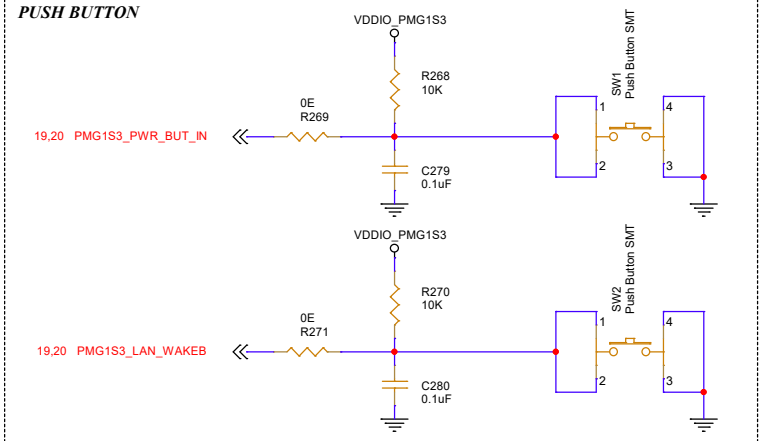

SPI EEPROM

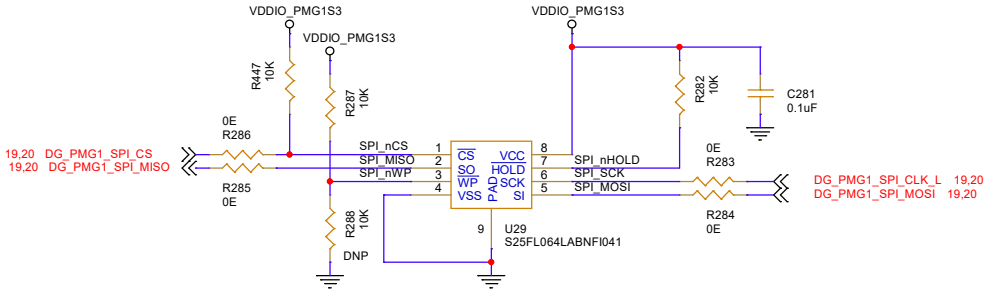

LED

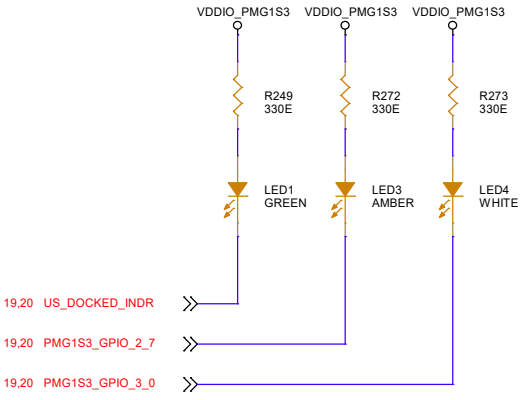

DEBUG LED

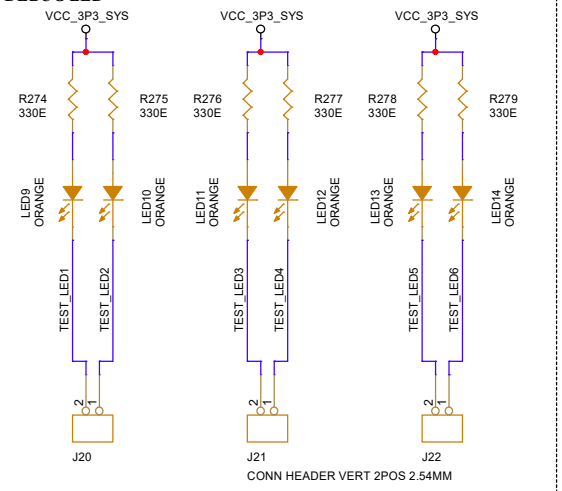

Debug LEDs: Connect Jumpers wires to debug headers while debugging.

DIP SOCKET - EEPROM

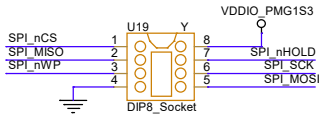

CCG7SC VALIDATION HEADER

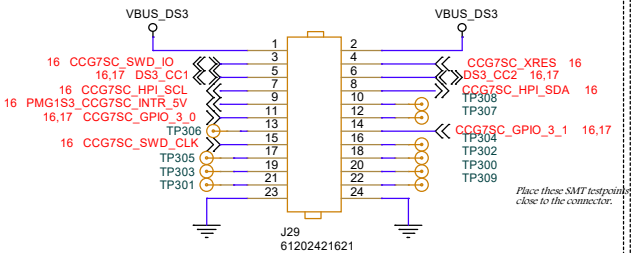

PSU ID

J25	J24	J23	VOLTAGE
MOUNT	NO MOUNT	NO MOUNT	1.65V
NO MOUNT	MOUNT	NO MOUNT	0.3V
NO MOUNT	NO MOUNT	MOUNT	2.48V
MOUNT	MOUNT	NO MOUNT	0.81V
NO MOUNT	MOUNT	MOUNT	1.01V
MOUNT	NO MOUNT	MOUNT	2.01V
MOUNT	MOUNT	MOUNT	1.19V

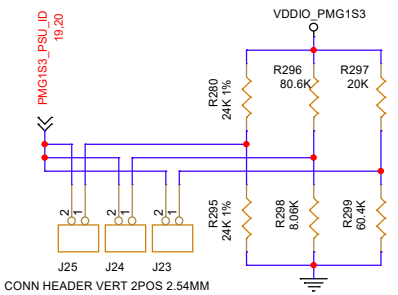

CAPSENSE BUTTON

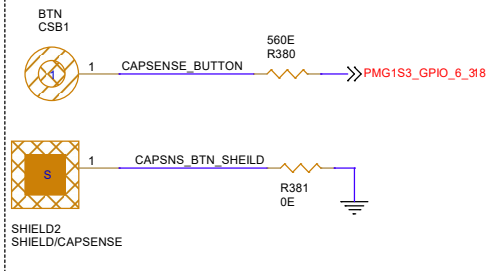

CAPSENSE CAPACITOR

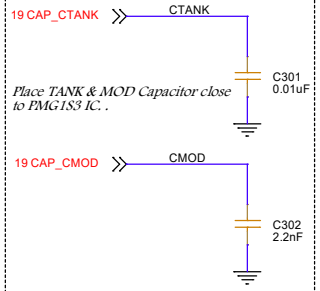

Legal Disclaimer :
The information given in this document shall in no event be regarded as a guarantee of conditions or characteristics. With respect to any examples or hints given herein, any typical values stated herein and/or any information regarding the application of the device, Infineon Technologies hereby disclaims any and all warranties and liabilities of any kind, including without limitation, warranties of non-infringement of intellectual property rights of any third party.

SCH Title :	*EZ-PD PMG1-S3 USB-C Dock*
Page Title:	*DEBUG HEADER & MISC*

Size	Document Number	Drawn By	Approved By	Rev
A3	<Doc>	ROHITH YADAV	GUBILI	03

Date: Wednesday, September 27, 2023 Sheet 20 of 22

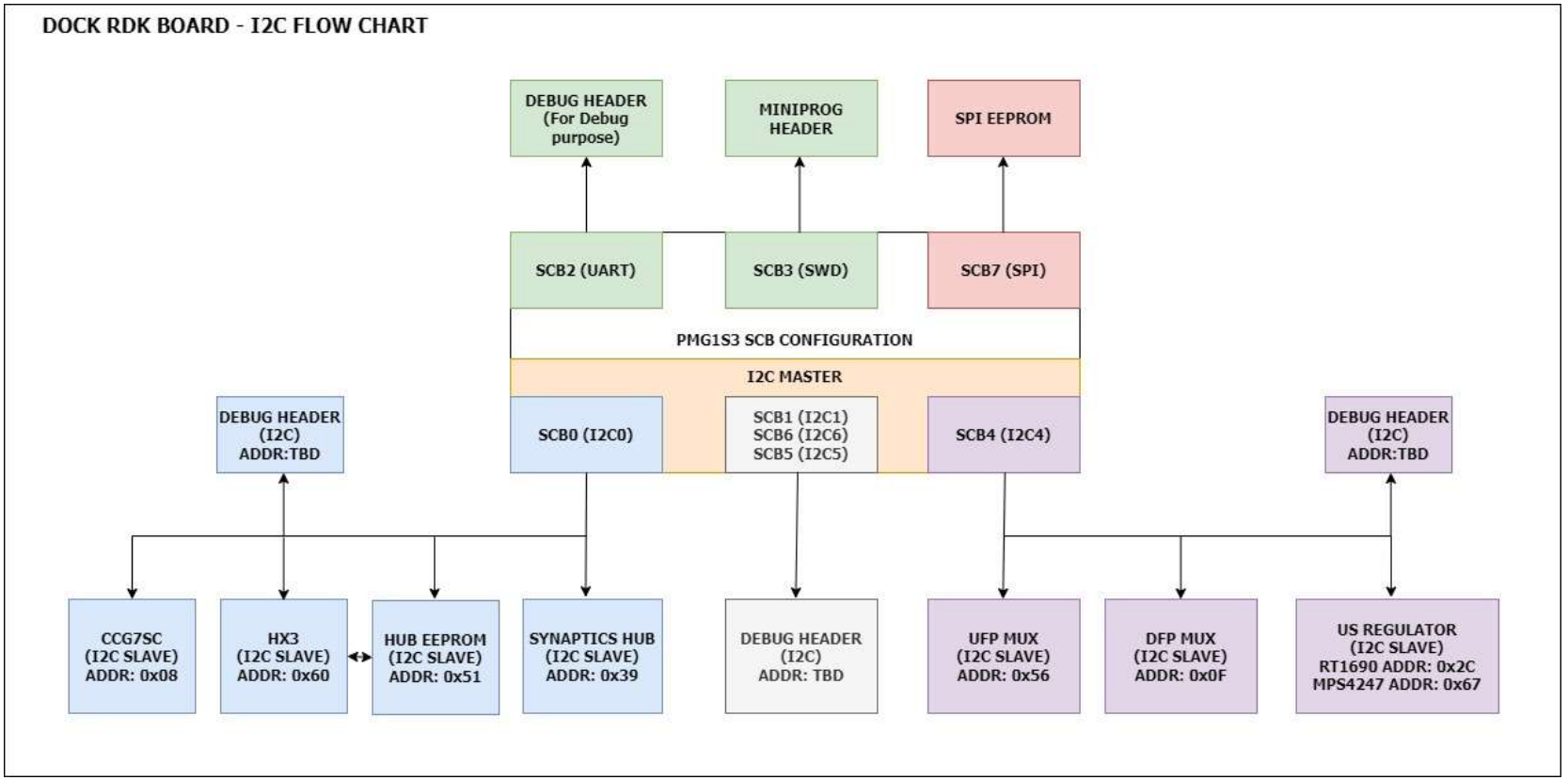

JUMPERS & ACCESSORIES

JUMPERS



For VMM_LP_CTRL

For PSU_ID

STANDOFF & SCREWS



USB CONNECTOR BRACKET

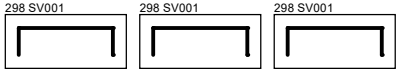

Legal Disclaimer :
The information given in this document shall in no event be regarded as a guarantee of conditions or characteristics. With respect to any examples or hints given herein, any typical values stated herein and/or any information regarding the application of the device, Infineon Technologies hereby disclaims any and all warranties and liabilities of any kind, including without limitation, warranties of non-infringement of intellectual property rights of any third party.

SCH Title : *EZ-PD PMG1-S3 USB-C Dock*				
Page Title: *JUMPER & ACCESORIES*				
Size	Document Number	Drawn By	Approved By	Rev
A3	*<Doc>*	*ROHITH YADAV*	*GUBILI*	*03*
Date: *Wednesday, September 27, 2023*		Sheet *21* of *22*		

REVISION HISTORY

REVISION NO	DESCRIPTION OF CHANGE	RELEASE DATE	RELEASE NOTES
REV 01	INITIAL RELEASE		
REV 02	1. Added U35-1.2V regualtor and U36-1.8V regualtor sections 2. R82,84,86 made DNP 3. Display port CFG1,CFG2, HPD signals connections were made proper 4. Q4 FET removed and 0E added as the HPD in VMM is 5V tolerant 5. Updated the R177 and R182 resistor net names 6. Added C409 and 410 7. Made R441,442,443 and 444 DNP 8. changed C194,195,198,199 to 0.22uF 9. Added 220K R478,479,480,481 resistor for US SSRX lines 11. Swapped SBU1 and SBU2 pins 12. Changed R214 to 90.9K 13. Updated CCG7S pinouts 14. Updated the PSU_ID resisotrs and added table 15. Added J22 to select between internal or external power supply for ANX MUX 16. Mounter 0E on R452 17. Mounter R194,195 and DNP R204,205 18. Upstream SSTX and RX lines swapped between ANX MUX and HX3 19. U1 and U18 changed to higher voltage rating part 20. UB1 mounted 21. Q4 removed and added 0E as the VMM is 5V tolerant on HPD 23. Added D24 in parallel to reduce diode drop and diode temp 24. Added 0E at the bypass path of DS3 power 25. Added bulk caps for HX3 IC pins 26. Updated net names of the HX3 pin 68 and 69 27. Changed C78,79 to 10pF 30. updated C194,195,198,199 to 0.22uF 31. Updated VBUS_US caps to 3.3uF 32. Added header J34 to disable the HPI interface 33. Updated Block diagram and power flow 34. D4,5,11,12 made DNP and NT2,3,4,5 mounted 35. Added USB connector bracket for type-C 36. PMG1S3 pin mapping changed to have a deicated CMOD and CTANK pins 37. Added TH test point for the bracket		
REV 03	1. made the HDMI and DP load switch as default option 2. moved the input power caps after the inrush protection circuit 3. changed the 5V port 1 feedback to 5V 4. changed the DS2 load switch current limit to 1.55A 5. changed the MPS and CAPSENSE connector to sullins part 6. Change Q26, Q27 MPN to IRLL014NTRPBF		

Legal Disclaimer :
The information given in this document shall in no event be regarded as a guarantee of conditions or characteristics. With respect to any examples or hints given herein, any typical values stated herein and/or any information regarding the application of the device, Infineon Technologies hereby disclaims any and all warranties and liabilities of any kind, including without limitation, warranties of non-infringement of intellectual property rights of any third party.

SCH Title :	*EZ-PD PMG1-S3 USB-C Dock*
Page Title:	*REVISION HISTORY*

Size	Document Number	Drawn By	Approved By	Rev
A3	*<Doc>*	*ROHITH YADAV*	*GUBILI*	*03*

Date: *Thursday, February 29, 2024* Sheet *22* of *22*